UNIVERSIDAD TÉCNICA DE AMBATO

FACULTAD DE CIENCIA E INGENIERÍA EN ALIMENTOS

CARRERA DE INGENIERÍA BIOQUÍMICA

Tema:

"Validación del Método Gravimétrico para la Determinación de Grasa en el Laboratorio Ecuachemlab Cía. Ltda."

Trabajo de Titulación, modalidad de Experiencia Práctica de Investigación y/o Intervención, previa la obtención del Título de Ingeniera Bioquímica, otorgado por la Universidad Técnica de Ambato, a través de la Facultad de Ciencia e Ingeniería en Alimentos.

Autora: Jackeline Aracely Jácome Mena

Tutor: Ing. Manolo Alexander Córdova Suárez.

Ambato – Ecuador

Abril 2016

APROBACIÓN DEL TUTOR

Ing. Manolo Alexander Córdova Suárez.

CERTIFICA

Que el presente trabajo de titulación ha sido prolijamente revisado. Por lo tanto autorizo la presentación de éste Trabajo de Titulación bajo la Modalidad Experiencias Prácticas de Investigación y/o Intervención, el mismo que corresponde a las normas establecidas en el Reglamento de Títulos y Grados de la Facultad

Ambato, 11 de Marzo del 2016.

Manolo Alexander Córdova Suárez.
C.I: 1802842508
TUTOR

DECLARACIÓN DE AUTENTICIDAD

Yo, Jackeline Aracely Jácome Mena, manifiesto que los resultados obtenidos en el proyecto de investigación, previo la obtención del título de Ingeniera Bioquímica son absolutamente originales, auténticos y personales; a excepción de las citas.

Srta. Jackeline Aracely Jácome Mena

CI. 180461648-8

AUTORA

APROBACIÓN DE LOS MIEMBROS DEL TRIBUNAL DE GRADO

Los suscritos profesores calificadores, aprueban el presente trabajo de Titulación, modalidad Experiencias Prácticas de Investigación y/o Intervención, el mismo que ha sido elaborado de conformidad con las disposiciones emitidas por la Facultad de Ciencia e Ingeniería en Alimentos de la Universidad Técnica de Ambato.

Para constancia firmar:

PRESIDENTE DEL TRIBUNAL
Ing. Mg. Alex Fabián Valencia Silva
CI. 1804312108-4

Ing. Mg. María Teresa Pacheco Tigselema
CI. 050263518-8

Ing. Mg. Araceli Alexandra Pilamala Rosales
CI. 180415529-7

Ambato, 7 de Abril del 2016.

DERECHOS DE AUTOR

Autorizo a la Universidad Técnica de Ambato, para que haga de este Proyecto de Investigación o parte de él, un documento disponible para su lectura, consulta y proceso de investigación, según las normas de la Institución.

Cedo los Derechos en línea patrimoniales de mi Proyecto, con fines de difusión pública, además apruebo la reproducción de este Proyecto dentro de las regulaciones de la Universidad, siempre y cuando esta reproducción no suponga una ganancia económica y se realice respetando mis derechos de autor.

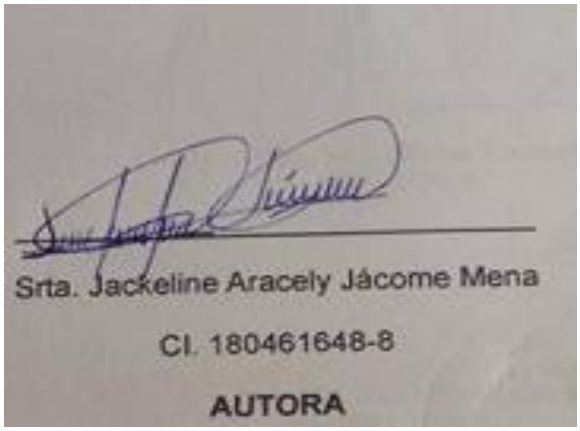

DEDICATORIA

A mis padres:

Jaime y Marianita

Por acompañarme durante toda mi vida, por velar mí camino del conocimiento, por sus consejos para guiarme en mi vida profesional.

A mis hermanos:

Javier y Joshua

Por su tiempo, apoyo y sabiduría.

Jackeline Jácome

AGRADECIMIENTOS

A la Universidad Técnica de Ambato por su acogida y apoyo recibido durante los fructíferos años que he desarrollado mi interés investigativo.

A ECUACHEMLAB Cía. Ltda. por la oportunidad de expandir mis horizontes investigativos.

A Juan José por su compañerismo y amistad incondicional.

A todos quienes de una u otra manera colaboraron para culminar el presente trabajo de grado.

ÍNDICE GENERAL DE CONTENIDOS

ÍNDICE DE TABLAS

INDICE DE ANEXOS

ANEXO E: Certificado del hexano

ANEXO F: Material de referencia cereales

ANEXO G: Material de referencia lácteos

ANEXO H: Material de referencia cárnicos

RESUMEN

Para la validación del método de obtención de grasa cruda a partir de muestras alimenticias (cereales, lácteos y cárnicos) se utilizó el Método Oficial de la AOAC 2003.06 el cuál arrojó variaciones tanto en repetibilidad como reproducibilidad.

El valor crítico de repetibilidad (Lr) y el de reproducibilidad (LR) se realizaron para los dos analistas de estudio y sus resultados fueron para Cereales y derivados Lr=0,18; 0,31 LR=0,22; Lácteos y derivados Lr= 0,18; 0,82 LR= 0,68; Cárnicos y derivados Lr= 0,35; 0,54 LR= 0,38. Estos valores indican una alta fidelidad en los valores que arroje el método de análisis.

Los valores de exactitud de las tres matrices utilizadas (cereales, lácteos, cárnicos con sus derivados) se encontraron dentro del rango de desviación estándar de la muestra de referencia previamente validada.

Los valores de incertidumbre para los productos analizados fueron para cereales y derivados ±0,16 g/100g, lácteos y derivados ±0,50 g/100g y cárnicos y derivados ±0,27g/100g.

Palabras claves: validación, extracción de grasa, exactitud e incertidumbre

ABSTRACT

To validate the method for obtaining crude fat from food samples (cereals, dairy and meat) the AOAC Official Method 2003.06 was used and showed variations in repeatability and reproducibility.

The critical value of repeatability (Lr) and reproducibility (LR) were performed for both analysts of study and its results were for cereals and their derivatives Lr=0,18; 0,31 LR=0,22; dairy and their derivatives Lr= 0,18; 0,82 LR= 0,68; meat and their derivatives Lr= 0,35; 0,54 LR= 0,38. These values show a high fidelity of the values of the analysis method.

The accuracy values of the three matrices used (cereals, dairy, meat with their derivatives) were within the range of standard deviation of the sample reference previously validated.

Uncertainty values for the products analyzed were for cereals and their derivatives: ±0.16g/100g; dairy and their derivatives: ±0.50 g/100g; meat and their derivatives: ±0.274g/100g.

Keywords: validation, Fat Extraction, accuracy and uncertainty

INTRODUCCION

La norma ISO 17025 define a la validación como, la confirmación mediante examen y la aportación de evidencias objetivas que demuestren el cumplimiento de ciertos requisitos para el uso específico previsto **(ENAC, 2014).**Las características típicas que se deberían considerar en la validación son: Exactitud, Precisión, Incertidumbre, Especificidad, Límite de detección, Límite de cuantificación, Linealidad, Rango, Robustez (**SALAZAR, 2004).**

La incertidumbre del resultado de una medida refleja la falta de conocimiento exacto del valor del mensurando. Esa incertidumbre proviene de los efectos aleatorios y de la corrección imperfecta del resultado de la medida debida a efectos sistemáticos. El objetivo de un sistema de gestión de las mediciones es gestionar el riesgo de que los equipos y procesos de medición pudieran producir resultados incorrectos que afecten a la calidad del producto de una prueba de ensayo(**SAAVEDRA, 2009**).

Los alimentos están constituidos por diversas sustancias que pueden agruparse como: compuestos nutritivos (proteínas, carbohidratos, lípidos, minerales y vitaminas), sin carácter nutricional (presentes de forma natural que pueden ser beneficiosos o no), presentes de forma accidental (contaminantes procedentes del medio) y compuestos exógenos (adicionados con un fin determinado**) (Gil & Ruiz , 2010)**.Para tener una idea general de la calidad de un alimento y su composición se hacen usualmente análisis de contenido inmediato o proximal, que comprende una evaluación de los componentes globales de los alimentos: grasa, proteínas, carbohidratos, humedad, y ceniza (**CASTAÑEDA, 2011**).

CAPÍTULO I

EL PROBLEMA

1.1 Tema de Investigación

Validación del Método Gravimétrico para la Determinación de Grasa en el Laboratorio Ecuachemlab Cía. Ltda.

1.2 Justificación

Existe la necesidad por parte delos laboratorios de obtener datos confiables de la cantidad de grasa que presentan los alimentos analizados por lo que es responsabilidad del laboratorio corresponder a su confianza con resultados que solucionen sus dudas. El deber del Laboratorio de Análisis de Alimentos Ecuachemlab es proporcionar resultados confiables a la demanda, calculada aproximadamente de 100 análisis al mes para la determinación de grasa utilizando un método adecuado para su propósito. Además se debe establecer el grado de validación requerido de acuerdo a sus políticas de calidad, como parte de los procesos de mejoramiento continuo.

El laboratorio debe asegurarse que es capaz de demostrar que el método para la Determinación de grasa es apropiado para su fin, obteniendo datos experimentales de los ensayos de características del método como exactitud, precisión e incertidumbre de los resultados que pruebe que es apropiado para su utilización.

La cantidad de grasa obtenida en los análisis en los alimentos es una necesidad de la industria nacional y al ser la grasa un nutriente importante en la dieta diaria, es de suma importancia que el Laboratorio de Análisis de Alimentos Ecuachemlab, cuente con un método que permita cuantificar la grasa de manera segura; esto se consigue con la validación del método ya que de esta manera se demuestra la obtención de resultados confiables y seguros, satisfaciendo así la necesidad del mercado.

El análisis de los lípidos es muy importante ya que juegan un papel relevante en la nutrición, en la industria constituyen un ingrediente base para elaborar cosméticos, productos farmacéuticos, productos químicos y productos alimenticios. De manera específica los lípidos de los alimentos por sus propiedades físicas y químicas como lo es su composición, estructura cristalina y propiedades de fusión, influyen mucho en las propiedades funcionales de numerosos alimentos. Sin embargo los lípidos de los alimentos ya sea en forma de aceite o grasa, han sido asociados con enfermedades, de manera especial las grasas saturadas de origen animal o vegetal y las grasas parcialmente hidrogenadas, que se cree aumentan el riesgo de sufrir enfermedades relacionadas con el sistema cardiovascular

1.3 Objetivos

1.3.1 Objetivo General

Validarel Método Gravimétrico para la Determinación de Grasa en el Laboratorio Ecuachemlab Cía. Ltda.

.

1.3.2 Objetivos Específicos

- Elaborar un procedimiento para la determinación de grasa por método gravimétrico.
- Verificar la validez del método a través de pruebas con muestras de referencia certificadas
- Determinar el grado de incertidumbre del método validado

CAPITULO II

MARCO TEÓRICO

2.1 Antecedentes investigativos

La norma NTE INEN ISO/IEC 17025 es la norma internacionalmente reconocida para evaluar la competencia técnica de laboratorios de ensayo y calibración. La norma NTE INEN ISO 15189 es la norma internacional para evaluar la competencia técnica de los laboratorios clínicos. Estas son las normas con la que el Servicio de Acreditación Ecuatoriano, (SAE), acredita a los laboratorios. (**SAE, s/f**)

El método de inmersión para la extracción de la grasa es un método oficial de la AOAC para carnes y productos cárnicos. Su uso también está muy extendido en los laboratorios de análisis de alimentos para determinar grasa cruda en el alimento, grano y forraje. Aproximadamente 1/3 de los laboratorios informan los resultados de grasa cruda en la alimentación animal a la Asociación de Funcionarios de control de alimentación(AAFCO).**(THIEX NANCY J,2003)**

Aún los métodos bien establecidos necesitan ser validados por los analistas usando el personal, reactivos y equipos del laboratorio cuyo método se quiere validar. La validación puede hacerse analizando un conjunto de muestras que han sido analizadas por otro método o por otro laboratorio. El analista debe familiarizarse con un método y asegurarse que ha alcanzado el grado deseado de recuperación y precisión después de haber analizado un conjunto de blanco y muestras analíticas sintéticas o fortificadas (**VINAGRE. s/f**)

La validación de la metodología analítica para la determinación de residuos químicos en tejidos comestibles incluye todos los procedimientos necesarios para demostrar que el método utilizado es confiable y reproducible por otros investigadores para la determinación de las concentraciones de un analito en una matriz biológica y que puede ser aplicada en forma segura y que representen las condiciones reales en las cuales se encuentra el compuesto. Por lo tanto, la validación es una herramienta fundamental para demostrar que la metodología analítica es segura y confiable para el propósito establecido y también juega un rol significativo en la evaluación e interpretación de los resultados obtenidos. (**NUÑEZ et-alt 2007)**

La medición de grasas totales es crucial en el análisis de alimentos. La hidrólisis ácida o alcalina es necesaria allí donde los ácidos grasos están ligados a glicéridos, ésteres de esterol, glicol y fosfolípidos. La hidrólisis afecta a las paredes de la célula y desintegra las emulsiones de grasa y los enlaces de proteína y lípido. Existen múltiples métodos AOAC para varias matrices que incorporan una hidrólisis ácida o alcalina para lograr la liberación total de la grasa contenida en varios productos, seguida de la extracción de las grasas totales mediante éteres mezclados. Estos métodos AOAC requieren mucha mano de obra con variaciones en la reproducibilidad a través de matrices. (**HYDROTHERM,2015)**

Las grasas son compuestos orgánicos muy heterogéneos, pero que tienen en común la propiedad de ser solubles en algunas substancias denominadas solventes orgánicos, como pueden ser éter etílico, éter de petróleo, hexano, etc. (**INDEX. 2007**)

Todos los alimentos, sean de origen animal o vegetal, están compuestos por los mismos nutrientes (agua, carbohidratos, lípidos, proteínas, vitaminas y minerales). En general, los alimentos vegetales tienen una elevada proporción de carbohidratos (almidón y fibra) y, excepto las oleaginosas, mayor cantidad de grasa; por el contrario, los alimentos de origen animal suelen poseer un mayor contenido proteico y de aminoácidos esenciales que los alimentos de origen vegetal y, excepto la leche, prácticamente carecen de carbohidratos. Los alimentos de origen mineral (sal, fosfatos, etc.), obviamente, sólo aportan minerales.(**FAO. 2009.)**

Los alimentos de origen natural para los animales, por lo general contienen niveles bajos de grasa, pero en los alimentos balanceados el empleo de aceites, grasas y cebos es práctica común ya que aportan un beneficio económico-nutricional. En los productos vegetales como nueces, semillas, legumbres y cereales la fracción lipídica se compone principalmente de acilgliceroles neutros, que se consideran lípidos simples **(NAWAR, 1998**).

Un aceite o grasa cruda se compone mayormente de triacilgliceroles (más de 95%). Se denominan grasas neutras (sólidas) o aceites neutros (líquidos) a los triacilgliceroles según su estado físico a temperatura ambiente. Además de los triacilgliceroles, también hay pequeñas cantidades de diacilgliceroles, monoacilgliceroles y ácidos grasos libres (**GUNSTONE**, **2000**).

En la medición de grasa no solo se toma en cuenta factores físicos como la reducción del tamaño de partícula sino también la estructura intermolecular de la matriz de los alimentos. Una parte de los lípidos presentes en los lácteos, panes, harinas y productos animales están ligados a proteínas y carbohidratos y

una extracción directa con solventes no polares es ineficiente, estos alimentos necesitan una hidrólisis ácida previa al análisis **(VACA, 2014).**

CAPITULO III

MATERIALES Y MÈTODOS

3.1 Parte Experimental

3.1.1 Materiales

EQUIPOS

- Balanza analítica
- Extractor de grasa
- Cocineta
- Estufa
- Sorbona
- Vasos de extracción
- Núcleos de ebullición
- Erlenmeyer volumétrico
- Desecador
- Papel filtro
- Embudos
- Capsulas de aluminio
- Probetas graduadas

REACTIVOS

- Ac. Clorhídrico Concentrado grado técnico
- Hexano p.a.
- Agua desmineralizada

3.2 Metodología

La metodología que se empleó para la realización y consecución del tema de trabajo se basó en el Método Oficial de la AOAC 2003.06

Este método es aplicado para el análisis de forrajes, granos de cereales, alimentos para animales, leche o productos lácteos, carnes, harina de pescado, o las semillas oleaginosas en concentraciones 0,5 a 100% de grasa.

3.3 PREPARACIÓN DE LA MUESTRA

3.3.1 Cereales y derivados

Se realizó una homogenización previa, mezclando bien (en el recipiente original de preferencia) mediante agitación por lo menos tres veces.

En caso de granos y muestras heterogéneas, se trituró las muestras hasta lograr partículas lo más finas posibles, se trasvasó al recipiente de muestra correspondiente homogenizando bien la muestra mediante agitación antes de proceder a pesar.

3.3.2 Lácteos y derivados

Para muestras de leche fluida o semejantes se homogenizó bien la muestra agitando el envase por lo menos tres veces antes de pesar, los derivados sólidos se trituró lo más finamente posible, se homogenizó agitando varias veces antes de pesar.

3.3.3 Cárnicos y derivados

En el caso de cárnicos que se hallaban en refrigeración, se esperó que la muestra adquiera temperatura ambiente, si la muestra ya se encontraba a temperatura ambiente se trituró en pedazos pequeños, se homogenizó por lo menos tres veces y se pesó.

3.4 HIDRÓLISIS:

3.4.1 Hidrólisis para cereales y derivados

Se pesó 1 y 5 g de muestra en un matraz Erlenmeyer, se añadió 70 ml de agua desmineralizada y 60 ml de ácido clorhídrico concentrado grado técnico.

Se sometió a hidrólisis mediante calentamiento a partir de que comenzó a hervir se tomó 30 minutos, todo el tratamiento se realizó dentro de la Sorbona.

3.4.2 Hidrólisis para lácteos y derivados

3.4.2.1 HIDRÓLISIS PARA LACTEOS LIQUIDOS Y DERIVADOS LIQUIDOS.

Se pesó alrededor de 25 g de muestra en un matraz Erlenmeyer de 500 ml, se añadió 70 ml de agua desmineralizada y 60 ml de ácido clorhídrico concentrado grado técnico.

Se sometió a hidrólisis mediante calentamiento a partir de que comenzó a hervir se tomó 30 minutos, todo el tratamiento se realizó dentro de la sorbona.

3.4.2.2 HIDRÓLISIS PARA LECHE EN POLVO O QUESOS.

Se pesó alrededor de 3 g de muestra en un matraz Erlenmeyer, se añadió 70 ml de agua desmineralizada y 60 ml de ácido clorhídrico concentrado grado técnico.

Se sometió a hidrólisis mediante calentamiento a partir de que comenzó a hervir se tomó 30 minutos, todo el tratamiento se realizó dentro de la sorbona.

3.4.3 Hidrólisis para cárnicos y derivados

Se pesó alrededor de 3 g de muestra en un matraz Erlenmeyer, se añadió 70 ml de agua desmineralizada y 60 ml de ácido clorhídrico concentrado grado técnico.

Se sometió a hidrólisis mediante calentamiento a partir de que comenzó a hervir se tomó 30 minutos, todo el tratamiento se realizó dentro de la sorbona.

3.5 FILTRACION

Después de la hidrólisis se retiró de la cocineta y se esperó a que no emita vapores, se filtró la muestra, sobre papel filtro debidamente doblado y previamente humedecido para evitar perdida de muestra, Se lavó el matraz Erlenmeyer con agua caliente, evitando perdidas de muestra.

Se lavó la muestra retenida en el papel filtro hasta ausencia total de ácido clorhídrico técnico (aproximadamente con 400ml de agua caliente), se retiró con cuidado el papel filtro y se colocó en una cápsula, identificando cada una de ellas con el número correspondiente a la muestra, se colocó en la estufa por 20 minutos a 130 ºC.

Cuando el papel se encontró seco y frío se introdujo cuidadosamente en los capuchones de celulosa, se limpió la cápsula contenedora cuidadosamente con algodón empapado en hexano para evitar perdida de grasa adherida a la cápsula.

3.6 EXTRACCION

Se tomó el peso de un vaso de extracción de grasa, previamente lavado, secado a 130ºC por al menos una hora. Se encendió el extractor de grasa y se abrió el flujo de agua del condensador.

Se adhirió a las columnas de extracción los capuchones que contienen las muestras, se añadió suficiente hexano (alrededor de 40ml) dentro de cada vaso para cubrir las porciones de prueba cuando los capuchones están en la posición de inmersión.

Se colocó los vasos debajo de las columnas de extracción y se fijó en el lugar correspondiente, se colocó las columnas de extracción en la posición de inmersión, asegurándose que los dedales se encuentren sumergidos en el solvente y se hirvió por 20 min.

Se verificó el rango de reflujo apropiado, después de los 20 minutos se levantó los capuchones y se colocó en la posición de lavado por 40 min.
Después de corridos los 40 minutos se cerró las llaves de las columnas de extracción y se destiló la mayor cantidad de solvente posible de los vasos para recuperar el hexano y alcanzar sequedad aparente, alrededor de 20 minutos.

Se removió los vasos de extracción del extractor de grasa y se colocó en la sorbona para finalizar la evaporación del solvente a baja temperatura cuando fue necesario, si no lo requiere se llevó los vasos a la estufa directamente a 130°C por 30 min para eliminar los restos del solvente y la humedad residual existente.

Se puso los vasos con la grasa al desecador, se enfrió hasta temperatura ambiente y se tomó el peso del vaso más la grasa.

3.7 Validación del método

La validación del método se realizó en 3 matrices (cárnicos, lácteos y cereales) cada uno con 4 puntos(Tabla 1) con 20 repeticiones, los 10 primeros datos los tomó el analista 1 y los 10 restantes el analista 2.

Tabla #1: "Matrices y puntos utilizados

MATRIZ	PUNTOS			
CARNICOS	Lomo de cerdo	Mortadela	Salchicha	Tocino
LACTEOS	Leche descremada	Manjar de leche	Queso fresco	Crema de leche
CEREALES	Arroz	Avena	Galleta	Soya

*Elaborado por: JácomeJackeline*2016.

Los puntos propuestos han sido tomados mediante revisión bibliográfica en FoodComposition and NutritionTables (Souci, Fachmann, &Kraut, 2000) de tal forma que se pueda trabajar con un rango adecuado y se detallan en la Tabla 2.

Tabla 2. Puntos de medición

Matriz	Puntos	% grasa
Cárnicos y derivados	Lomo de cerdo	7,50
	Mortadela	12,4
	Salchicha	16,5
	Tocino	21,1
Lácteos y derivados	Leche descremada	0,07
	Manjar de leche	8,80
	Queso fresco	18,1
	Crema de leche	31,7
Cereales y derivados	Arroz	0,98
	Avena	7,9
	Galleta	------
	Soya	20,6

Elaborado por: JácomeJ., 2016.

Fuente: Food Composition and Nutrition Tables; *et al*., 2000.

En el desarrollo del trabajo propuesto, la validación del método se basó en la obtención de Exactitud, Precisión e Incertidumbre.

Para la determinación de valor de incertidumbre de medida implícita en el método se empleó Tablas de Análisis de Varianza (ANOVA).

Para realizar los cálculos de la estimación de la incertidumbre las contribuciones se clasifican en:

TIPO A: Es la contribución mediante el estudio estadístico de una serie de observaciones, es decir, la desviación estándar máxima de la repetibilidad y reproducibilidad.

TIPO B: Contribución de la incertidumbre y resolución de equipos calibrados (Certificado de calibración de la balanza analítica).

Incertidumbre Combinada

La incertidumbre de una medición cuando el resultado se obtiene a partir de la raíz cuadrada positiva de las contribuciones de tipo A y de tipo B.

$$u_{combinada} = \sqrt{\text{CONTRIBUCIONES DEL TIPO A} + \text{CONTRIBUCIONES DEL TIPO B}}$$

Incertidumbre Expandida

Magnitud que define un intervalo alrededor del resultado de una medición el que se espera cubra una fracción grande de la distribución de los valores que podrían atribuirse razonablemente al mesurando.

$$u_{expandida} = u_{combinada} \times k$$

k= factor de cobertura= 2 (95%)

Factor de cobertura (k)

Factor que puede considerarse como la probabilidad de cobertura o nivel de confianza del intervalo, factor numérico usado como multiplicador de la incertidumbre combinada para obtener una incertidumbre expandida. El factor de cobertura se encuentra típicamente en el intervalo de 2 a 3.

De acuerdo al tipo de método de validación se evaluó precisión (repetibilidad y reproducibilidad) y Exactitud.

Precisión: Se determinó la precisión en términos de repetibilidad y reproducibilidad:

- Repetibilidad: Se realizó 10 repeticiones (por cada analista) de cada punto para cada una de las matrices. Adicionalmente se calculó la desviación estándar (Sr) y el coeficiente de variación (CVr %).
- Reproducibilidad: Se tomó 5 datos del primer analista y 5 datos del segundo analista para cada punto de cada una de las matrices. Así mismo, se calculó la desviación estándar (Sri) y el coeficiente de variación (CVri %).

Exactitud: Se demostró la capacidad del método para dar resultados lo más próximo posible a un valor verdadero utilizando un material de referencia certificado.

CAPÍTULO IV

4 RESULTADOS Y DISCUSIÓN

El análisis de la información se basó en el estudio, interpretación y tabulación de los datos, los resultados obtenidos mediante el trabajo de laboratorio y estudio estadístico, los mismos que fueron sustentados con revisión bibliográfica

4.1 REPORTE DE RESULTADOS

Durante todo el trabajo experimental los análisis de los resultados fueron realizados por dos técnicos, esto debido a los parámetros de validación necesarios como precisión (análisis de reproducibilidad y repetibilidad). Otra razón por la cual se realizaron los estudios con dos analistas recae en la necesidad del laboratorio EcuachemlabCía.Ltda. para tener la facilidad de obtención de resultados confiables sin depender de un solo analista.

4.1.1 Datos Primarios de Cereales y derivados

En las Tablas 3 y 4 se muestran valores de porcentajes de grasa de cereales y derivados donde el valor más alto fue encontrado en soya mientras que el valor más bajo fue encontrado en arroz.

Analista 1

Tabla 3. Datos Primarios Porcentaje de Grasa Cereales y derivados

Nº	PUNTO 1	PUNTO 2	PUNTO 3	PUNTO 4
	Arroz	**Avena**	**Galleta**	**Soya**
	% GRASA	**% GRASA**	**% GRASA**	**% GRASA**
1	1,00	9,59	17,89	24,96
2	0,96	9,65	17,95	24,80
3	1,00	9,57	18,02	24,68
4	0,94	9,57	17,95	24,88
5	0,96	9,60	17,78	24,81
6	1,04	9,67	17,84	24,80
7	0,97	9,62	17,91	24,97
8	0,99	9,57	18,07	24,54
9	1,03	9,61	17,91	24,69
10	1,01	9,57	18,12	24,83

Elaborado por: Jácome J., 2016.

Fuente: ECUACHEMLAB 2015.

Analista 2

Tabla 4. Datos Primarios Porcentaje de Grasa Cereales y Derivados

Nº	PUNTO 1	PUNTO 2	PUNTO 3	PUNTO 4
	Arroz	**Avena**	**Galleta**	**Soya**
	% GRASA	**% GRASA**	**% GRASA**	**% GRASA**
1	0,98	9,67	17,92	24,94
2	1,03	9,55	17,89	24,65
3	0,99	9,55	17,61	24,99
4	0,99	9,55	17,80	24,68
5	0,99	9,68	17,64	24,87
6	1,02	9,61	17,99	24,64
7	0,98	9,62	17,70	24,83
8	1,02	9,56	17,58	24,49
9	0,99	9,61	17,91	24,79
10	1,05	9,54	17,59	24,88

Elaborado por: Jácome J., 2016.

Fuente: ECUACHEMLAB 2015

4.1.2 Datos Primarios de Lácteos y derivados

En las Tablas 5 y 6 se presentan valores de porcentajes de grasa de lácteos y derivados donde el valor más alto fue encontrado en crema de leche mientras que el valor más bajo fue encontrado en leche descremada.

Analista 1

Tabla 5. Datos Primarios Porcentaje de Grasa Lácteos y Derivados

Nº	PUNTO 1	PUNTO 2	PUNTO 3	PUNTO 4
	Leche descremada	Manjar de leche	Queso fresco	Crema de leche
	% GRASA	% GRASA	% GRASA	% GRASA
1	0,23	8,26	17,03	30,31
2	0,23	8,43	17,29	29,72
3	0,21	8,40	17,66	30,13
4	0,22	8,48	17,74	29,85
5	0,22	8,45	17,67	30,16
6	0,21	8,32	17,69	29,78
7	0,21	8,67	17,77	30,89
8	0,22	8,46	17,19	30,28
9	0,21	8,58	17,56	30,65
10	0,23	8,40	17,59	30,54

Elaborado por: Jácome J., 2016.

Fuente: ECUACHEMLAB 2015

Analista 2

Tabla 6. Datos Primarios Porcentaje de Grasa Lácteos y Derivados

Nº	PUNTO 1	PUNTO 2	PUNTO 3	PUNTO 4
	Leche descremada	Manjar de leche	Queso fresco	Crema de leche
	% GRASA	% GRASA	% GRASA	% GRASA
1	0,20	8,34	17,59	30,78
2	0,20	8,31	17,76	30,90
3	0,21	8,53	17,15	29,91
4	0,22	8,68	17,01	30,72
5	0,20	8,39	17,53	30,48
6	0,21	8,46	17,16	29,91
7	0,22	8,43	17,61	30,98
8	0,20	8,58	17,69	30,96
9	0,21	8,34	17,73	30,94
10	0,20	8,28	17,30	30,70

Elaborado por: Jácome J., 2016.

Fuente: ECUACHEMLAB 2015

4.1.3 Datos Primarios de Cárnicos y derivados

En las Tablas 7 y 8 se observan valores de porcentajes de grasa de cárnicos y derivados donde el valor más alto fue encontrado en tocino mientras que el valor más bajo fue encontrado en lomo de cerdo.

Analista 1

Tabla 7. Datos Primarios Porcentaje de Grasa Cárnico y Derivados

Nº	PUNTO 1	PUNTO 2	PUNTO 3	PUNTO 4
	Lomo de cerdo	Mortadela	Salchicha	Tocino
	% GRASA	% GRASA	% GRASA	% GRASA
1	2,20	12,39	16,33	19,40
2	2,31	12,33	15,99	19,60
3	2,26	12,39	16,28	19,30
4	2,17	12,37	15,82	19,82
5	2,12	12,10	16,65	19,56
6	2,32	12,01	16,32	19,37
7	2,17	12,31	16,36	19,51
8	2,33	12,14	16,13	19,63
9	2,39	12,40	16,60	19,49
10	2,34	12,31	15,83	19,47

Elaborado por: Jácome J., 2016.

Fuente: ECUACHEMLAB 2015

Analista 2

Tabla 8. Datos Primarios Porcentaje de Grasa Cárnicos y Derivados

Nº	PUNTO 1	PUNTO 2	PUNTO 3	PUNTO 4
	Lomo de cerdo	Mortadela	Salchicha	Tocino
	% GRASA	% GRASA	% GRASA	% GRASA
1	2,16	12,33	16,25	19,58
2	2,37	12,31	16,41	19,77
3	2,14	12,05	16,41	19,39
4	2,36	12,18	15,99	19,29
5	2,35	12,33	16,43	19,25
6	2,22	12,18	15,92	19,46
7	2,19	12,37	16,44	19,59
8	2,24	12,07	15,97	19,39
9	2,22	12,16	16,26	19,36
10	2,24	12,15	15,68	19,83

Elaborado por: Jácome J., 2016.

Fuente: ECUACHEMLAB 2015

4.2 ANÁLISIS DE REPETIBILIDAD

4.2.1 Repetibilidad de Cereales y derivados

El motivo por el cual se hace el análisis de repetibilidades con el fin de determinar si el analista involucrado a un proceso experimental de laboratorio puede obtener resultados similares estadísticamente en una misma muestra en diferentes réplicas.

Todos los valores de Límite de repetibilidad (Lr) se comprueban si el valor es menor o igual a aquél de la diferencia absoluta entre dos resultados de prueba individuales, obtenidos bajo condiciones de repetibilidad, el cual se espera con una probabilidad de 95%. (**EURACHEM, 2005)**

En la Tabla 9 se reportan valores de porcentaje de grasa de cereales y derivados y en la Tabla 10 se reporta el análisis de varianza (F: 0,46; gl: 9; p>0,05) donde los resultados muestran que los valores de las réplicas del experimento realizado por el analista 1 no varían significativamente entre sí, pudiéndose deducir que no

existe efecto en la repetibilidad del proceso. Para confirmar esta aseveración se relaciona este análisis estadístico con el valor Lr (0,18)

Analista 1

Tabla 9. Repetibilidad de Cereales y Derivados

Nº	PUNTO 1	PUNTO 2	PUNTO 3	PUNTO 4
	% GRASA	% GRASA	% GRASA	% GRASA
1	1,00	9,59	17,89	24,96
2	0,96	9,65	17,95	24,80
3	1,00	9,57	18,02	24,78
4	0,94	9,57	17,95	24,88
5	0,96	9,60	17,78	24,81
6	1,04	9,67	17,94	24,80
7	0,97	9,62	17,91	24,97
8	0,99	9,57	18,07	24,84
9	1,03	9,61	17,91	24,93
10	1,01	9,57	18,12	24,83
X	0,99	9,60	17,95	24,80
S	0,03	0,04	0,10	0,13
%CVr	3,30	0,39	0,57	0,53

Elaborado por: Jácome J., 2016.

Fuente: ECUACHEMLAB 2015

Tabla 10. Análisis de Varianza de Cereales y Derivados

ANÁLISIS DE VARIANZA						
Origen de las variaciones	*Suma de cuadrados*	*Grados de libertad*	*Promedio de los cuadrados*	*F*	*Probabilidad*	*Valor crítico para F*
Filas	0,0361057	9	**0,00401174**	**0,46759734**	0,88343477	**2,25013148**
Columnas	3189,20743	3	1063,06914	123908,28	5,6803E-56	2,96035132
Error	0,23164608	27	0,00857948			
Total	3189,47518	39				

Elaborado por: Jácome J., 2016.

Fuente: ECUACHEMLAB 2015

S 0,063

LIMITE DE REPETIBILIDAD **Lr** **0,18**

Analista 2

En la Tabla 11 se reportan valores de porcentaje de grasa de cereales y derivados y en la Tabla 12 se reporta el análisis de varianza (F: 0,91; gl: 9; p>0,05) donde los resultados muestran que los valores de las réplicas del experimento realizados por el analista 2 no varían significativamente entre sí, pudiéndose deducir que no existe efecto en la repetibilidad del proceso. Para confirmar esta aseveración se relaciona este análisis estadístico con el valor Lr (0,31)

Tabla 11. Repetibilidad de Cereales y Derivados

Nº	**PUNTO 1**	**PUNTO 2**	**PUNTO 3**	**PUNTO 4**
	% GRASA	**% GRASA**	**% GRASA**	**% GRASA**
1	0,98	9,67	17,92	24,94
2	1,03	9,55	17,89	24,65
3	0,99	9,55	17,61	24,99
4	0,99	9,55	17,80	24,68
5	0,99	9,68	17,64	24,87
6	1,02	9,61	17,99	24,64
7	0,98	9,62	17,70	24,83
8	1,02	9,56	17,58	24,49
9	0,99	9,61	17,91	24,79
10	1,05	9,54	17,59	24,88
X	1,00	9,59	17,76	24,78
S	0,02	0,05	0,16	0,16
%CVr	2,48	0,55	0,88	0,64

Elaborado por: Jácome J., 2016.

Fuente: ECUACHEMLAB 2015

Tabla 12. Análisis de Varianza de Cereales y Derivados

ANÁLISIS DE VARIANZA						
Origen de las variaciones	*Suma de cuadrados*	*Grados de libertad*	*Promedio de los cuadrados*	*F*	*Probabilidad*	*Valor crítico para F*
Filas	0,11069273	9	**0,01229919**	0,91229802	0,52916036	**2,25013148**
Columnas	3165,62425	3	1055,20808	78270,524	2,8015E-53	2,96035132
Error	0,36400188	27	0,01348155			
Total	3166,09894	39				

Elaborado por: Jácome J., 2016.

Fuente: ECUACHEMLAB 2015

	S	0,111
LIMITE DE REPETIBILIDAD	**Lr**	**0,31**

4.2.2 Repetibilidad de Lácteos y derivados

Analista 1

En la Tabla 13 se reportan valores de porcentaje de grasa de lácteos y derivados y en la Tabla 14 se reporta el análisis de varianza (F: 0,46; gl: 9; p>0,05) donde los resultados muestran que los valores de las réplicas del experimento realizados por el analista 1 no varían significativamente entre sí, pudiéndose deducir que no existe efecto en la repetibilidad del proceso. Para confirmar esta aseveración se relaciona este análisis estadístico con el valor Lr (0,18)

Tabla 13. Repetibilidad de Lácteos y Derivados

Nº	PUNTO 1	PUNTO 2	PUNTO 3	PUNTO 4
	% GRASA	% GRASA	% GRASA	% GRASA
1	1,00	9,59	17,89	24,96
2	0,96	9,65	17,95	24,80
3	1,00	9,57	18,02	24,68
4	0,94	9,57	17,95	24,88
5	0,96	9,60	17,78	24,81
6	1,04	9,67	17,84	24,80
7	0,97	9,62	17,91	24,97
8	0,99	9,57	18,07	24,54
9	1,03	9,61	17,91	24,69
10	1,01	9,57	18,12	24,83
X	0,99	9,60	17,95	24,80
S	0,03	0,04	0,10	0,13
%CVr	3,30	0,39	0,57	0,53

Elaborado por: Jácome J., 2016.

Fuente: ECUACHEMLAB 2015

Tabla 14. Análisis de Varianza de Lácteos y Derivados

ANÁLISIS DE VARIANZA						
Origen de las variaciones	*Suma de cuadrados*	*Grados de libertad*	*Promedio de los cuadrados*	*F*	*Probabilidad*	*Valor crítico para F*
Filas	0,0361057	9	**0,00401174**	0,46759734	0,88343477	**2,25013148**
Columnas	3189,20743	3	1063,06914	123908,28	5,6803E-56	2,96035132
Error	0,23164608	27	0,00857948			
Total	3189,47518	39				

Elaborado por: Jácome J., 2016.

Fuente: ECUACHEMLAB 2015

S 0,063

LIMITE DE REPETIBILIDAD	Lr	0,18

Analista 2

En la Tabla 15 se reportan valores de porcentaje de grasa de lácteos y derivados y en la Tabla 16 se reporta el análisis de varianza (F: 1.56; gl: 9; p>0,05) donde los resultados muestran que los valores de las réplicas del experimento realizados por el analista 2 no varían significativamente entre sí, pudiéndose deducir que no existe efecto en la repetibilidad del proceso. Para confirmar esta aseveración se relaciona este análisis estadístico con el valor Lr (0,82)

Tabla 15. Repetibilidad de Lácteos y Derivados

Nº	PUNTO 1	PUNTO 2	PUNTO 3	PUNTO 4
	% GRASA	% GRASA	% GRASA	% GRASA
1	0,20	8,34	17,59	30,78
2	0,20	8,31	17,76	30,90
3	0,21	8,53	17,15	29,91
4	0,22	8,68	17,01	30,72
5	0,20	8,39	17,53	30,48
6	0,21	8,46	17,16	29,91
7	0,22	8,43	17,61	30,98
8	0,20	8,58	17,69	30,96
9	0,21	8,34	17,73	30,94
10	0,20	8,28	17,30	30,70
X	0,21	8,44	17,45	30,63
S	0,01	0,13	0,27	0,41
%CVr	4,44	1,51	1,56	1,33

Elaborado por: Jácome J., 2016.

Fuente: ECUACHEMLAB 2015

Tabla 16. Análisis de Varianza de Lácteos y Derivados

ANÁLISIS DE VARIANZA						
Origen de las variaciones	*Suma de cuadrados*	*Grados de libertad*	*Promedio de los cuadrados*	*F*	*Probabilidad*	*Valor crítico para F*
Filas	0,79434563	9	**0,08826063**	1,56169247	0,17730626	**2,25013148**
Columnas	5094,93393	3	1698,31131	30050,0925	1,1453E-47	2,96035132
Error	1,52593225	27	0,05651601			
Total	5097,2542	39				

Elaborado por: Jácome J., 2016.

Fuente: ECUACHEMLAB 2015

S 0,297

LIMITE DE REPETIBILIDAD	**Lr**	**0,82**

4.2.3 Repetibilidad de Cárnicos y derivados

Analista 1

En la Tabla 17 se reportan valores de porcentaje de grasa de cárnicos y derivados y en la Tabla 18 se reporta el análisis de varianza (F: 0,41; gl: 9; p>0,05) donde los resultados muestran que los valores de las réplicas del experimento realizados por el analista 1 no varían significativamente entre sí, pudiéndose deducir que no existe efecto en la repetibilidad del proceso. Para confirmar esta aseveración se relaciona este análisis estadístico con el valor Lr (0,35)

Tabla 17. Repetibilidad de Cárnicos y Derivados

Nº	PUNTO 1	PUNTO 2	PUNTO 3	PUNTO 4
	% GRASA	% GRASA	% GRASA	% GRASA
1	2,20	12,39	16,33	19,40
2	2,31	12,33	15,99	19,60
3	2,26	12,39	16,28	19,30
4	2,17	12,37	15,82	19,82
5	2,12	12,10	16,65	19,56
6	2,32	12,01	16,32	19,37
7	2,17	12,31	16,36	19,51
8	2,33	12,14	16,13	19,63
9	2,39	12,40	16,60	19,49
10	2,34	12,31	15,83	19,47
X	2,26	12,27	16,23	19,52
S	0,09	0,14	0,29	0,15
%CVr	3,97	1,13	1,77	0,76

Elaborado por: Jácome J., 2016.

Fuente: ECUACHEMLAB 2015

Tabla 18. Análisis de Varianza de Cárnicos y Derivados

ANÁLISIS DE VARIANZA						
Origen de las variaciones	*Suma de cuadrados*	*Grados de libertad*	*Promedio de los cuadrados*	*F*	*Probabilidad*	*Valor crítico para F*
Filas	0,14379998	9	**0,015977776**	0,41288614	0,91695652	2,25013148
Columnas	1679,93483	3	559,9782761	14470,5539	2,1946E-43	2,96035132
Error	1,04484	27	0,038697778			
Total	1681,12347	39				

Elaborado por: Jácome J., 2016.

Fuente: ECUACHEMLAB 2015

	S	0,126
LIMITE DE REPETIBILIDAD	**Lr**	**0,35**

Analista 2

En la Tabla 19 se reportan valores de porcentaje de grasa de cárnicos y derivados y en la Tabla 20 se reporta el análisis de varianza (F: 1,21; gl: 9; p>0,05) donde los resultados muestran que los valores de las réplicas del experimento realizados por el analista 2 no varían significativamente entre sí, pudiéndose deducir que no existe efecto en la repetibilidad del proceso. Para confirmar esta aseveración se relaciona este análisis estadístico con el valor Lr (0,54)

Tabla 19. Repetibilidad de Cárnicos y Derivados

Nº	**PUNTO 1**	**PUNTO 2**	**PUNTO 3**	**PUNTO 4**
	% GRASA	**% GRASA**	**% GRASA**	**% GRASA**
1	2,16	12,33	16,25	19,58
2	2,37	12,31	16,41	19,77
3	2,14	12,05	16,41	19,39
4	2,36	12,18	15,99	19,29
5	2,35	12,33	16,43	19,25
6	2,22	12,18	15,92	19,46
7	2,19	12,37	16,44	19,59
8	2,24	12,07	15,97	19,39
9	2,22	12,16	16,26	19,36
10	2,24	12,15	15,68	19,83
X	2,25	12,21	16,18	19,49
S	0,08	0,11	0,27	0,20
%CVr	3,78	0,93	1,66	1,01

Elaborado por: Jácome J., 2016.

Fuente: ECUACHEMLAB 2015

Tabla 20. Análisis de Varianza de Cárnicos y Derivados

ANÁLISIS DE VARIANZA						
Origen de las variaciones	*Suma de cuadrados*	*Grados de libertad*	*Promedio de los cuadrados*	*F*	*Probabilidad*	*Valor crítico para F*
Filas	0,3392753	9	**0,03769726**	1,21143414	0,32860704	2,25013148
Columnas	1675,72904	3	558,576345	17950,3375	1,1985E-44	2,96035132
Error	0,8401826	27	0,03111787			
Total	1676,90849	39				

Elaborado por: Jácome J., 2016.

Fuente: ECUACHEMLAB 2015

	S	0,194
LIMITE DE REPETIBILIDAD	**Lr**	**0,54**

4.3 ANÁLISIS DE REPRODUCIBILIDAD

El motivo por el cual se realiza el análisis de reproducibilidad es con el fin de determinar si el analista 1 y el analista 2 (experimentalmente) pueden obtener resultados similares estadísticamente en una misma muestra en diferentes replicas.

Todos los valores de Límite de reproducibilidad (LR) se comprueban si el valor es menor o igual a aquél de la diferencia absoluta entre dos resultados deprueba individuales, obtenidos bajo condiciones de reproducibilidad, el cual seespera con una probabilidad de 95% (**EURACHEM, 2005**).

En la Tabla 21 se reportan valores de porcentaje de grasa de cereales y derivados y en la Tabla 22 se reporta el análisis de varianza (F: 0,64; gl: 9; p>0,05) donde los resultados muestran que los valores de las réplicas del

experimento realizados por el analista 1 y 2 no varían significativamente entre sí, pudiéndose deducir que no existe efecto en la reproducibilidad del proceso. Para confirmar esta aseveración se relaciona este análisis estadístico con el valor LR (0,22)

4.3.1 Reproducibilidad de Cereales y derivados

Tabla 21. Reproducibilidad de Cereales y Derivados

	Nº	Arroz	Avena	Galleta	Soya
ANALISTA 1	**1**	1,00	9,59	17,89	24,96
	2	0,96	9,65	17,95	24,80
	3	1,00	9,57	18,02	24,68
	4	0,94	9,57	17,95	24,88
	5	0,96	9,60	17,78	24,81
ANALISTA 2	**6**	0,98	9,67	17,92	24,94
	7	1,03	9,55	17,89	24,65
	8	0,99	9,55	17,61	24,99
	9	0,99	9,55	17,80	24,68
	10	0,99	9,68	17,64	24,87
	Promedio	**0,984**	**9,597**	**17,846**	**24,826**
	Desvest	**0,025**	**0,051**	**0,135**	**0,125**
	% CVri	**2,510**	**0,531**	**0,754**	**0,505**

Elaborado por: Jácome J., 2016.

Fuente: ECUACHEMLAB 2015

Tabla 22. Análisis de Varianza de Cereales y Derivados

ANÁLISIS DE VARIANZA						
Origen de las variaciones	*Suma de cuadrados*	*Grados de libertad*	*Promedio de los cuadrados*	*F*	*Probabilidad*	*Valor crítico para F*
Filas	0,05883935	9	**0,00653771**	0,64265095	0,75101899 5	**2,250131477**
Columnas	3189,219401	3	1063,07313	104499,194	5,66399E-55	2,960351318
Error	0,274671732	27	0,01017303			
Total	3189,552912	39				

Elaborado por: Jácome J., 2016.

Fuente: ECUACHEMLAB 2015

	S	0,081
LIMITE DE REPRODUCIBILIDAD	**LR**	**0,22**

4.3.2 Reproducibilidad de Lácteos y derivados

En la Tabla 23 se reportan valores de porcentaje de grasa de lácteos y derivados y en la Tabla 24 se reporta el análisis de varianza (F: 0,86; gl: 9; p>0,05) donde los resultados muestran que los valores de las réplicas del experimento realizados por el analista 1 y 2 no varían significativamente entre sí, pudiéndose deducir que no existe efecto en la reproducibilidad del proceso. Para confirmar esta aseveración se relaciona este análisis estadístico con el valor LR (0,68)

Tabla 23. Reproducibilidad de Lácteos y Derivados

	Nº	**Leche descremada**	**Manjar de leche**	**Queso fresco**	**Crema de leche**
ANALISTA 1	**1**	0,23	8,26	17,03	30,31
	2	0,23	8,43	17,29	29,72
	3	0,21	8,40	17,66	30,13
	4	0,22	8,48	17,74	29,85
	5	0,22	8,45	17,67	30,16
ANALISTA 2	**6**	0,20	8,34	17,59	30,78
	7	0,20	8,31	17,76	30,90
	8	0,21	8,53	17,15	29,91
	9	0,22	8,68	17,01	30,72
	10	0,20	8,39	17,53	30,48
	Promedio	**0,214**	**8,428**	**17,442**	**30,297**
	Desvest	**0,011**	**0,119**	**0,296**	**0,413**
	% CVri	**4,915**	**1,408**	**1,695**	**1,362**

Elaborado por: Jácome J., 2016.

Fuente: ECUACHEMLAB 2015

Tabla 24. Análisis de Varianza de Lácteos y Derivados

ANÁLISIS DE VARIANZA						
Origen de las variaciones	*Suma de cuadrados*	*Grados de libertad*	*Promedio de los cuadrados*	*F*	*Probabilidad*	*Valor crítico para F*
Filas	0,549340898	9	**0,06103788**	0,86844206	0,56375597 7	**2,250131477**
Columnas	4985,005208	3	1661,6684	23642,0858	2,91476E-46	2,960351318
Error	1,897677189	27	0,07028434			
Total	4987,452226	39				

Elaborado por: Jácome J., 2016.

Fuente: ECUACHEMLAB 2015

	S	0,247
LIMITE DE REPRODUCIBILIDAD	**LR**	**0,68**

4.3.3 Reproducibilidad de Cárnicos y derivados

En la Tabla 25 se reportan valores de porcentaje de grasa de cárnicos y derivados y en la Tabla 26 se reporta el análisis de varianza (F: 0,51; gl: 9; p>0,05) donde los resultados muestran que los valores de las réplicas del experimento realizados por el analista 1 y 2 no varían significativamente entre sí, pudiéndose deducir que no existe efecto en la reproducibilidad del proceso. Para confirmar esta aseveración se relaciona este análisis estadístico con el valor LR (0,38)

Tabla 25. Reproducibilidad de Cárnicos y Derivados

	Nº	Lomo de cerdo	Mortadela	Salchicha	Tocino
ANALISTA 1	**1**	2,20	12,39	16,33	19,40
	2	2,31	12,33	15,99	19,60
	3	2,26	12,39	16,28	19,30
	4	2,17	12,37	15,82	19,82
	5	2,12	12,10	16,65	19,56
ANALISTA 2	**6**	2,16	12,33	16,25	19,58
	7	2,37	12,31	16,41	19,77
	8	2,14	12,05	16,41	19,39
	9	2,36	12,18	15,99	19,29
	10	2,35	12,33	16,43	19,25
	Promedio	**2,244**	**12,278**	**16,257**	**19,496**
	Desvest	**0,099**	**0,122**	**0,251**	**0,201**
	% CVri	**4,398**	**0,995**	**1,544**	**1,031**

Elaborado por: Jácome J., 2016.

Fuente: ECUACHEMLAB 2015

Tabla 26. Análisis de Varianza de Cárnicos y Derivados

ANÁLISIS DE VARIANZA						
Origen de las variaciones	*Suma de cuadrados*	*Grados de libertad*	*Promedio de los cuadrados*	*F*	*Probabilidad*	*Valor crítico para F*
Filas	0,169306946	9	**0,01881188**	0,5165189 8	0,84961864 7	**2,250131477**
Columnas	1682,679152	3	560,893051	15400,4737	9,47145E-44	2,960351318
Error	0,983353672	27	0,03642051			
Total	1683,831812	39				

Elaborado por: Jácome J., 2016.

Fuente: ECUACHEMLAB 2015

	S	0,137
LIMITE DE REPRODUCIBILIDAD	**LR**	**0,38**

4.4 ANÁLISIS DE EXACTITUD

Se analizaron muestras de referencia certificadas solicitadas al NIST (NationalInstitute of Standards and Technology)con el motivo de realizarun análisis de exactitud con el fin de determinar si los valores del proceso experimental se encuentran dentro de los valores de referencia.

Al analizar los productos cereales se obtuvo una media de porcentaje de grasa de 1,96%; el valor de referencia del NIST se encuentra en un intervalo de 2,02 ± 0,40. Encontrándose así que el porcentaje de grasa está dentro de los valores referenciales.

Al analizar los productos lácticos se obtuvo una media de porcentaje de grasa de 30,42%; el valor de referencia del NIST se encuentra en un intervalo de 30,43 ± 0,95. Encontrándose así que el porcentaje de grasa está dentro de los valores referenciales.

Al analizar los productos cárnicos se obtuvo una media de porcentaje de grasa de 19,04%; el valor de referencia del NIST se encuentra en un intervalo de 18,96 ± 0,40. Encontrándose así que el porcentaje de grasa está dentro de los valores referenciales.

4.5 ANÁLISIS DE INCERTIDUMBRE

Dentro del análisis de incertidumbre los dos valores más relevantes para el estudio son la incertidumbre combinada (IC) e incertidumbre expandida (IE).

Se identificaron las fuentes de incertidumbre asociadas a la medición, las atribuidas al peso de la muestra y a los pesos de los vasos de extracción.

A continuación se cuantificaron las fuentes de incertidumbre identificadas, utilizando los datos obtenidos de manera experimental en el laboratorio de

análisis (incertidumbre tipo A) y los valores del certificado de calibración de la balanza el mismo que se encuentran disponible en el anexo C (incertidumbre tipo B).

Posteriormente se expresó todas las incertidumbres encontradas como incertidumbres estándar, para lo cual se utilizó un factor de cobertura igual a k=2, valor que se lo puede obtener de los certificados de calibración.

A partir de esta información se combinó los componentes de incertidumbre individuales utilizando la ley de la propagación de los errores, obteniendo la incertidumbre total combinada, luego se realizó el cálculo de la incertidumbre expandida, el cual proporciona el intervalo de confianza en donde se encontró el valor verdadero de determinación de grasa, esto se logró multiplicando la incertidumbre combinada por el factor de cobertura k=2 asumiendo una distribución normal de los datos alrededor de la media y una probabilidad del 95 % de contener el valor verdadero.

Dentro del análisis de productos de cereales y derivados los valores que arrojaron estos cálculos para todas las matrices fueron 0,081g/100g (IC) y 0,16 g/100g (IE)

Dentro del análisis de productos lácteos y derivados los valores que arrojaron estos cálculos para todas las matrices fueron 0,25 g/100g (IC) y 0,50 g/100g (IE)

Dentro del análisis de productos cárnicos y derivados los valores que arrojaron estos cálculos para todas las matrices fueron 0,13 g/100g (IC) y 0,27 g/100g (IE)

4.6 DISCUSIÓN

Para medir las fuentes de variación entre los datos obtenidos de los ensayos realizados a cereales, lácticos y cárnicos en condiciones de repetibilidad y reproducibilidad, se realizó un análisis de varianza observando que todos los valores críticos para F son mayores para el F calculado aceptando y comprobando que no existe diferencia significativa en los diferentes porcentajes de determinación de grasa.

El comportamiento al aplicar elMétodo Oficial de la AOAC 2003.06para determinación de porcentaje de grasa en cereales, lácticos, cárnicos y sus derivados respectivamente, en condiciones de repetibilidad y de reproducibilidad no género variación significativa en ningún punto; se puede utilizar el método el número de veces que sea necesario en diferentes condiciones como equipo, tiempo y reactivo, así como también se demuestra quelas modificaciones que pudieron haberse realizado no afectan su desempeño, ni la confiabilidad de los resultados por este entregado.

Lo normal es estimar la exactitud analizando muestras añadidas con tres concentraciones distintas (baja, media y alta) que abarquen la totalidad del rango de trabajo. La concentración de estas adiciones estándar debe ser distinta de la utilizada para preparar las curvas de calibración y debe prepararse con una solución estándar de trabajo distinta. Los criterios de aceptación de la exactitud deben ser similares a los utilizados para medir la precisión (UNODC, 2010).

Se obtuvo 3 muestras una para cada matriz: una con porcentaje de grasa baja (cereales) el valor de referencia del NIST se encuentra en un intervalo de 2,02 ± 0,40; porcentaje de grasa media (cárnicos) se encuentra en un intervalo de 18,96 ± 0,40 y para el porcentaje de grasa alto (lácteos) se encuentra en un intervalo de 30,43 ± 0,95 abarcando así la totalidad del rango del trabajo. Encontrándose así que el porcentaje de grasa de cada una de las muestras de referencia permitió comprobar la exactitud del método comparando las muestras de referencia y los datos obtenidos en el análisis de cada una de las muestras en el laboratorio ECUACHEMLAB Cía. Ltda.

La concordancia y cercanía de los valores obtenidos al aplicar el método Oficial de la AOAC para la determinación de porcentaje de grasa en cereales, lácteos, cárnicos y sus derivados respectivamente, en comparación con valores tomados como verdaderos debidamente certificados estuvieron dentro del intervalo de aceptación, utilizando diversos procedimientos expresados como intercomparación. Por lo mismo todo resultado que se obtenga al aplicar el método deberá ser tomado como verdadero.

Se calculó la incertidumbre combinada y expandida ya que cuando se trata de modelos no lineales se puede realizar la aproximación de segundo orden de la serie de Taylor, o incluso obtener los valores de esperanza matemática y varianza sin aproximaciones, directamente, soluciones mucho más complejas matemáticamente que la ley de propagación de incertidumbres(Pérez M. 2012).

CAPÍTULO V

5 CONCLUSIONES Y RECOMENDACIONES

5.1 Conclusiones

- Se validó el Método Gravimétrico para la Determinación de Grasa en el Laboratorio Ecuachemlab Cía. Ltda. al cumplir con los criterios de aceptación de precisión, exactitud en las matrices de lácteos, cereales, cárnicos y sus derivados con sus respectivas incertidumbres.
- Se elaboró un procedimiento para la determinación de grasa por método gravimétrico que facilita la determinación de grasa en el laboratorio Ecuachemlab Cía. Ltda. (Anexo 1)
- Se verificó la validez del método a través de pruebas con muestras de referencia certificadas obtenidas del NIST (NationalInstitute of Standards and Technology) para productos de cereales, lácteos y cárnicos.
- Se determinóel grado de incertidumbre combinada y expandida principalmente obteniendo valores de *±0,50 g /100g (cereales), ±0,16 g /100g (lácteos), y ±0,27 g /100g (cárnicos)*del método validado, la mayor contribución para la estimación de la incertidumbre la proporciona la dispersión que existe entre los datos de reproducibilidad, debido a las variaciones de los analistas, más los valores de incertidumbres que cumplen con los criterios de aceptación

5.2 Recomendaciones

- Ampliar estos estudios a otras áreas de procesamiento de alimentos como el área de confitería, chocolatería.
- Incrementar el número de analistas para poder aumentar el índice de reproducibilidad y repetibilidad.

REFERENCIAS BIBLIOGRÁFICAS

CASTAÑEDA, A. (Agosto de 2011). *Importancia del Analisis de los Alimentos.* Recuperado el 16 de Diciembre de 2015, de uaeh.edu.mx: http://www.uaeh.edu.mx/docencia/P_Presentaciones/icbi/asignatura/AnalisisAlimentos.pdf

ENAC, E. N. (2014). *ENAC.* Recuperado el 15 de Diciembre de 2015, de https://www.enac.es/documents/7020/b7e24234-daba-4a62-9652-76eb7e96db30

EURACHEM . (2005). *The Fitness for Purpose of Analytical Methods.*ReinoUnidopág. 55-58

FAO. (2009)Nutrición y Alimentación de Peces y Camarones Cultivados Manual. Recuperadode: www.fao.org/docrep/field/003/ab492s/AB492S06.htm - 106k

Grasa Cruda. (2009) Determinación de extracto etéreo. Recuperado de: www.geocities.com/mvz_jmtz/grasalab.html

GIL, A., & RUIZ , M. (2010). En *Tratado de Nutrición: Composición y Calidad Nutritiva de los Alimentos*España: Editorial Medica Panamericana. (pág. 565).

GUNSTONE F, HARWOOD J. AND DIJKSTRA A.(2000)Ed.The Lipid Handbook. ThirdEdition CRC Pressby Taylor & Francis Group 486-493

HYDROTHERM. (2015). Estudio de validación del contenido total de grasa mediante hidrólisis ácida automática – ISO 8262-1 Recuperado de: http://www.gerhardt.de/es/News/Estudio+de+validaci%C3%B3n+del+conte

nido+total+de+grasa+mediante+hidr%C3%B3lisis+%C3%A1cida+autom%C3%A1tica+(HYDROTHERM)+%E2%80%93+ISO+8262_1_.html

HORWITZ, W., & LATIMER, G. (2005). Official Methods of Analysis (AOAC). USA: AOAC International .

INDEX. (2007) Nutrición Animal. Recuperado de www.webs.ulpgc.es/nutranim/tema3.htm

NAWAR W. W. (1998). Lípidos Capítulo 5 En Fennema O. Ed. Química de los Alimentos 2ª Ed. Editorial Acribia pág. 270-287

NÚÑEZ J, PALMA C, ARANEDA M, CABEZAS I & PÉREZ R (2007)Validación de un método analítico y determinación de residuos de ivermectina en tejidos de ovino Recuperado de: http://www.scielo.org.ve/scielo.php?pid=S0798-2592007000600002&script=sci_arttext

PÉREZ M. (2012). Estimación de incertidumbres. Guía GUM Revista Española de Metrología Recuperado de: http://www.uv.es/meliajl/Docencia/WebComplementarios/GuiaGUM_e_medida.pdf

VACA P. (2014) Efecto de la hidrólisis ácida en la medición de grasa cruda en leche y cocoa en polvo, chocolate instantáneo y alimento para camarón. Recuperado de: http://dspace.espoch.edu.ec:8080/bitstream/handle/123456789/204/56T00176.pdf?sequence=1

VINAGRE J. (s/f.)Calidad de métodos analíticos Recuperado de: ftp://ftp.fao.org/docrep/fao/010/ah833s/AH833S07.pdf

SAAVEDRA,N. (2009) Evaluación de la Incertidumbre en los resultados de laprueba de Ensayo para Determinar El Contenido De Grasas Por El Método Soxhlet Recuperado de: file:///C:/Users/USUARIO/Downloads/TL29.pdf

SAE. (s/f) Laboratorios. Recuperado de: http://www.acreditacion.gob.ec/como-acreditarse/

SALAZAR, L. l(2004). *med.ufro.cl*. Recuperado el 15 de Diciembre de 2015, de http://www.med.ufro.cl/Recursos/Bioquimica-offline/Apuntes/clinica1/validacion_metodologica_imp.pdf

SOUCI, S. W., FACHMANN, W., & KRAUT, H. (2000). *Food Composition and Nutrition Tables.* Stuttgart: Medpharma Scientific Publishers.

THIEX NANCY J. (2003) "Crude Fat, Hexanes Extraction, in Feed, Cereal Grain, and Forage (Randall/Soxtec/Submersion Method): Collaborative Study" South Dakota State University, Oscar E. Olson Biochemistry Laboratories, Box 2170, ASC 151, Brookings, SD 57007 Recuperado de: http://lib3.dss.go.th/fulltext/Journal/J.AOAC%201999-2003/J.AOAC2003/v86n5(sep-oct)/v86n5p899.pdf

SOUCI, S. W., FACHMANN, W., & KRAUT, H. (2000). *Food Composition and Nutrition Tables.*Stuttgart: Medpharma Scientific Publishers.

UNODC, O. d. (2010). *Directrices Para la Validación de Métodos Analíticos y la Calibración del Equipo Utilizado Para el Análisis de Drogas Ilícitas en Materiales Incautados y Especímenes Biológicos.* Obtenido de https://www.unodc.org/documents/scientific/Validation_Manual_STNAR41_Ebook_S.pdf

ANEXOS

6 ANEXO A: Procedimiento para la determinación de grasa por método gravimétrico

ECUACHEMLAB Cía. Ltda. Laboratorio Químico y Microbiológico del Ecuador		
PROCEDIMIENTO DE ANALISIS	Edición:	01
	Documento:	PA-FQ-105
	Página:	47 de 104
DETERMINACION DE GRASA CRUDA **AOAC Official Method 2003.06 18th Edition 2005**		

1. OBJETIVO:

Establecer las directrices necesarias para realizar la determinación de grasa cruda en alimentos

2. ALCANCE:

Aplicable para todos los alimentos de:

- Cereales y derivados
- Lácteos y derivados
- Cárnicos y derivados

3. PRINCIPIO

La grasa cruda de los alimentos son diversas sustancias como grasas, aceites, pigmentos y otras sustancias solubles. El contenido de "grasa" (algunas veces llamado extracto etéreo, grasa neutra o grasa cruda), el cual puede ser considerado como formado de constituyentes lípidos "libres" es aquel que puede ser extraído por los disolventes menos polares, mientras que los lípidos "enlazados" requieren disolventes más polares para su extracción. Estos pueden separarse por hidrólisis u otros tratamientos químicos para obtener el lípido libre, de aquí que la cantidad de lípido extraído de un producto alimenticio dependa del método de análisis usado.

La materia grasa es extraída de muestras secas por un tratamiento de dos etapas con solvente hexano una de inmersión y una de lavado. El solvente se recupera por condensación separando el material soluble. La grasa cruda se determina gravimétricamente luego de secado.

4. PREPARACIÓN DE LA MUESTRA:

- El manejo de las muestras se realiza en base al procedimiento Instructivo de Transporte, Manipulación, Recepción, Protección, y Disposición de las muestras
- En cereales y derivados realizar una homogenización previa, mezclando bien (en el recipiente original de preferencia) mediante agitación por lo menos tres veces.
- En caso de granos y muestras heterogéneas, triturar las muestras hasta lograr partículas lo más finas posibles, trasvasar al recipiente de muestra correspondiente homogenizar bien la muestra mediante agitación antes de proceder a pesar.
- Para muestras de leche fluida o semejantes se procede a homogenizar bien la muestra agitando el envase por lo menos tres veces antes de pesar, los derivados sólidos se procede a triturar lo más finamente posible homogenizar agitando varias veces antes de pesar.
- En el caso de cárnicos que se encuentren almacenados en refrigeración, esperar que la muestra adquiera temperatura ambiente, si la muestra ya se encuentra a temperatura ambiente moler en pedazos pequeños, triturar, homogenizar por lo menos tres veces y se procede a pesar.

5. LÍMITE DE CUANTIFICACIÓN

- No Aplica

6. RANGO DE TRABAJO

- No Aplica

7. EQUIPOS

- Balanza analítica EAFQ-009
- Extractor de grasa EAFQ-011
- Cocineta EAFQ-008
- Estufa EAFQ-010
- Sorbona EAFQ-014
- Vasos de extracción
- Núcleos de ebullición
- Erlenmeyer volumétrico
- Desecador
- Papel filtro
- Embudos
- Capsulas de aluminio
- Probetas graduadas

8. REACTIVOS

- Ac. Clorhídrico Concentrado grado técnico
- Hexano p.a
- Agua desmineralizada.

9. MATERIALES DE REFERENCIA

- No Aplica

10. NORMAS DE SEGURIDAD Y VERIFICACIÓN DE LOS EQUIPOS

- Verificar que los equipos a utilizar se encuentren debidamente conectados y encendidos.
- Verificar que la balanza se encuentre verificada, limpia y en perfectas condiciones.
- Verificar que exista cantidad suficiente de agua para el reflujo en el equipo extractor de grasas
- Verificar que la temperatura del equipo de extracción en el set sea de 180 ºC
- Utilizar guantes quirúrgicos para la manipulación de material de vidrio durante el ensayo.

11. PROCEDIMIENTO

11.1 HIDRÓLISIS PARA CEREALES Y DERIVADOS.

- Pesar 1 y 5 g de muestra en un matraz erlenmeyer, añadir 70 ml de agua desmineralizada y 60 ml de ácido clorhídrico concentrado grado técnico.
- Someter a hidrólisis mediante calentamiento a partir de que comienza a hervir tomar 30 minutos, todo el tratamiento se debe realizar dentro de la sorbona.

11.2 HIDRÓLISIS PARA LACTEOS LIQUIDOS Y DERIVADOS LIQUIDOS.

- Pesar alrededor de 25 g de muestra en un Matraz Erlenmeyer de 500 ml, añadir 70 ml de agua desmineralizada y 60 ml de ácido clorhídrico concentrado grado técnico.
- Someter a hidrólisis mediante calentamiento a partir de que comienza a hervir tomar 30 minutos, todo el tratamiento se debe realizar dentro de la sorbona.

11.3 HIDRÓLISIS PARA LECHE EN POLVO O QUESOS.

- Pesar alrededor de 3 g de muestra en un matraz erlenmeyer, añadir 70 ml de agua desmineralizada y 60 ml de ácido clorhídrico concentrado grado técnico.
- Someter a hidrólisis mediante calentamiento a partir de que comienza a hervir tomar 30 minutos, todo el tratamiento se debe realizar dentro de la sorbona.

11.4 HIDRÓLISIS PARA CARNES

- Pesar alrededor de 3 g de muestra en un matraz erlenmeyer, añadir 70 ml de agua desmineralizada y 60 ml de ácido clorhídrico concentrado grado técnico.
- Someter a hidrólisis mediante calentamiento a partir de que comienza a hervir tomar 30 minutos, todo el tratamiento se debe realizar dentro de la sorbona.

11.5 FILTRACION

- Después de la hidrólisis se retira de la cocineta y se espera a que no se emita vapores.
- Retirar de la sorbona y se procede a filtrar la muestra, sobre papel filtro debidamente doblado y previamente humedecido para evitar perdida de muestra.
- Lavar el matraz erlenmeyer con agua caliente evitando perdidas de muestra.
- Lavar la muestra retenida en el papel filtro hasta ausencia total de ácido clorhídrico técnico (aproximadamente con 400ml de agua caliente).
- Una vez concluido el lavado se procede a retirar con cuidado el papel filtro y se lo coloca en una cápsula, identificando cada una de ellas con el número correspondiente a la muestra, se lo coloca en la estufa por 20 minutos a 130 ºC.
- Cuando el papel se encuentra seco y frío se introduce cuidadosamente en los capuchones de celulosa, se limpia la cápsula contenedora cuidadosamente con algodón empapado en hexano para evitar perdida de grasa adherida a la cápsula.

11.6 EXTRACCION

- Tome el peso de un vaso de extracción de grasa, previamente lavado, secado a 130ºC por al menos una hora.
- Encender el extractor de grasa y abrir el flujo de agua del condensador.
- Adherir a las columnas de extracción los capuchones que contienen las muestras.
- Añadir suficiente hexano (alrededor de 40ml) dentro de cada vaso para cubrir las porciones de prueba cuando los capuchones están en la posición de inmersión.
- Colocar los vasos debajo de las columnas de extracción y fijarlos en el lugar correspondiente cerrando el equipo con la palanca prevista.
- Asegurarse que los vasos están colocados con el capuchón conteniendo la muestra correspondiente.
- Colocar las columnas de extracción en la posición de inmersión y asegurarse de que los dedales se encuentren sumergidos en el solvente y hervir por 20 min.
- Verificar el rango de reflujo apropiado.
- Cuando ha transcurrido los 20 minutos levantar los capuchones y colocar en la posición de lavado y extraer en esta posición por 40 min.
- Después de corridos los 40 minutos cerrar las llaves de las columnas de extracción y destilar la mayor cantidad de solvente posible de los vasos para recuperar el hexano y alcanzar sequedad aparente, alrededor de 20 minutos.
- Remover las vasos de extracción del extractor de grasa y colocar en la sorbona para finalizar la evaporación del solvente a baja temperatura cuando sea necesario, si no lo requiere llevar lo vasos a la estufa directamente.
- Secar los vasos de extracción en la estufa a 130° por 30 min para eliminar los restos del solvente y la humedad residual existente.

- Llevar los vasos con la grasa al desecador y enfriar hasta temperatura ambiente y tomar el peso del vaso más la grasa.

12. CÁLCULO Y REPORTE DE RESULTADOS

$$\textbf{\% Grasa} = \frac{\textbf{((Vaso + grasa) – vaso vacío) * 100}}{\textbf{g muestra}}$$

De donde:

Vaso + grasa = peso en gramos del vaso más la muestra
Vaso vacío = peso en gramos del vaso vacío
g muestra = peso de la muestra en gramos

Se reporta el % de grasa, en el Registro de Resultados Área Físico Químico R-03-4.1, en la Orden de Trabajo correspondiente.

13. CRITERIO DE ACEPTACIÓN Y RECHAZO

- Cuando se realiza el análisis de una muestra de intercomparación se utilizará el Z-Score, el mismo que deberá ser: $\geq$-2 Z $\leq$ 2

- Adicionalmente se correrá un blanco generalmente a la semana, pudiendo realizarse en menos tiempo dependiendo de la carga de trabajo.

14. INCERTIDUMBRE DEL MÉTODO

- No Aplica

15. REFERENCIAS

- Métodos Oficiales AOAC 2005, Edición 18
- Instructivo de manejo de la estufa IA-FQ-08
- Instructivo de manejo de la balanza IA-FQ-09
- Instructivo de Identificación y Codificación de Documentos IG-01-4.3
- Instructivo de Identificación y Codificación de Muestras IG-03-5.8
- Instructivo de Transporte, Manipulación, Recepción, Protección, y Disposición de las muestras IG-01-5.8.
- Informe de Resultados Área Físico Químico R-03-4.1
- Instructivo de Almacenamiento y Eliminación de Muestras IG-03-5.8

ANEXO B: DETERMINACION DE GRASA CRUDA. AOAC Official Method 2003.06 18th Edition 2005

GRASA
AOAC 2003.06

to the complete extraction of fat. This rate depends upon the equipment and should be supplied by the manufacturer. A reflux rate of ca 3–5 drops/s applies to many extraction systems.

Raise thimbles out of solvent and extract in this position for 40 min. Then evaporate as much solvent as possible from cups to reclaim solvent and attain apparent dryness.

Remove extraction cups from extractor and place in operating fume hood to finish evaporating solvent at low temperature. (*Note*: Take care not to pick up any debris on bottom of extraction cup while in hood. Let cups remain in hood until all traces of solvent are gone.)

Dry extraction cups in a 102° ± 2°C oven for 30 min to remove moisture. Excessive drying may oxidize fat and give high results. Cool in desiccator to room temperature and weigh to nearest 0.1 mg (F).

F. Calculations

$$\% \text{ Crude fat, diethylether extract} = \frac{F - T}{S} \times 100$$

where F = weight of cup + fat residue, g; T = weight of empty cup, g; S = test portion weight, g.

References: *J. AOAC Int.* **86**, 888(2003); 899(2003).

4.5.06

AOAC Official Method 2003.06
Crude Fat in Feeds, Cereal Grains, and Forages
Randall/Soxtec/Hexanes Extraction-Submersion Method
First Action 2003
Final Action 2006

[Applicable to the analysis of forages, cereal grains, and animal feeds other than baked or expanded products, dried milk or milk products, fishmeal, or oilseeds at concentrations from 0.5 to 100% fat. It is applicable to the same matrixes as **920.39** (*see* 4.5.01) and **930.09** (*see* 3.5.07).]

Caution: Store solvents in metal containers in solvent cabinet or solvent room that conforms to applicable safety legislation. Hexanes are extremely flammable. Have no open flames in the laboratory where the analysis is being performed. Avoid inhaling vapors. Use solvents in a properly operating hood equipped with explosion-proof lighting, wiring, and fan. Follow manufacturer recommendations for installation, operation, and safety of all extraction equipment. Make sure all solvent is evaporated from cups before placing them in the oven to avoid a fire or explosion.

See Table **2003.06** for results of interlaboratory study supporting acceptance of the method.

A. Principle

The Randall modification of the standard Soxhlet extraction submerges the test portion in boiling solvent, reducing the time needed for extraction. The solvent dissolves fats, oils, pigments, and other soluble substances, collectively termed "crude fat."

A dried, ground test portion is extracted by a 2-step process: In the first step, the thimble containing the test portion is immersed into the boiling solvent. The intermixing of matrix with hot solvent ensures rapid solubilization of extractables. The thimble is then raised above

Table 2003.06. Interlaboratory results for crude fat in animal feed, cereal grain, and forage, hexanes extraction (submersion) method

Material	Mean	Lab[a]	s_r	RSD_r, %	s_R	RSD_R, %
Dehydrated alfalfa	4.34	9(1)	0.14	3.21	0.16	3.75
Corn silage	1.91	9(1)	0.04	1.97	0.15	5.31
Mixed bird seed	7.15	9(1)	0.25	3.44	0.25	3.44
Texturized feed	2.91	10	0.09	3.07	0.18	6.27
Fat supplement	97.77	9(1)	1.29	1.32	1.84	1.88
Medicated goat feed	1.54	9(1)	0.03	1.94	0.13	8.48
Feedlot concentrate pellets	1.30	10	0.08	5.80	0.18	14.1
Cellulose (blank)	0.12	10	0.06	50.5	0.08	65.4
Calf starter medicated	2.58	10	0.09	3.52	0.14	5.61
Calf feed medicated	3.23	10	0.18	5.45	0.21	6.48
Meat meal/hulls mix	5.76	10	0.12	2.10	0.18	3.19
Swine feed	2.29	10	0.11	4.96	0.15	6.38
Broiler starter	5.99	10	0.17	2.83	0.22	3.61
High oil corn	7.63	9(1)	0.09	1.23	0.16	2.09

[a] Number of laboratories retained after the number of laboratories in parentheses were eliminated.

the solvent and the test portion is further extracted by a continuous flow of condensed solvent. The solvent is evaporated and recovered by condensation. The resulting crude fat residue is determined gravimetrically after drying.

The solubility characteristics of different solvents may result in slight differences in crude fat results. For this reason, the report should reflect the solvent used. Example: % Crude Fat, Hexanes Extraction.

B. Apparatus

(a) *Solvent extraction system.*—Multiple position extraction unit conducting 2-stage Randall extraction process with solvent recovery cycle, with Viton or Teflon™ seals compatible with ether or hexanes.

(b) *Thimbles and stand.*—Cellulose thimbles and stand to hold thimbles.

(c) *Extraction cups.*—Aluminum or glass. (Extraction temperature settings may differ; consult manufacturer's operating instructions.)

Items **(a)**–**(c)** are available as Soxtec systems from Foss or other Randall-type extraction systems.

C. Reagents

(a) *Hexanes.*—Boiling range 40°C including 68.7°C. Fisher H291, or equivalent.

(b) *Cotton.*—Defatted. Soak medical grade cotton in diethylether or hexanes for 24 h, agitating several times during this period. Remove and air dry.

(c) *Sand.*—Ashed (for ignition boats).

(d) *Celite 545.*

D. Preparation of Analytical Sample

Reduce particle size of samples to fineness of 0.75–1 mm.

E. Determination

Weigh 1–5 g test portions containing ca 100–200 mg fat directly into tared cellulose thimbles, according to following scheme:

Crude fat, %	Test portion weight, g
<2	5
5	2–4
10	1–2
>20	1

Record weight to nearest 0.1 mg (S) and thimble number.

Dry thimbles containing test portions at 102° ± 2°C for 2 h. If dried test portions will not be extracted immediately, store in desiccator. Both solvent and test materials must be free of moisture to avoid extraction of water-soluble components such as carbohydrates, urea, lactic acid, and glycerol, which will result in false high values.

An absorbent, such as diatomaceous earth (Celite or Super-Cel), can be added to the test portion when high fat materials, which melt through the thimble during the predry step, are present. Alternatively, defatted cotton can be added before the predry step to absorb the melted fat. If the material melts at 102°C, place a pretared extraction cup under the thimble during the drying step to catch any melted fat that was unabsorbed and escaped the thimble.

Place defatted (with same solvent to be used for extraction) cotton plug on top of test portion to keep material immersed during the boiling step and prevent any loss of test portion from top of thimble. Prepare cotton plug large enough to hold materials in place, yet as small as possible to minimize absorption of solvent. Adding the cotton plug before the 102° ± 2°C, 2 h drying step is acceptable.

Place three or four 5 mm glass boiling beads into each cup, and dry cups for at least 30 min at 102° ± 2°C. Transfer to desiccator and cool to room temperature. Weigh extraction cups and record weight to nearest 0.1 mg (T).

Extract, following manufacturer's instructions for operation of extractor. Preheat extractor and turn on condenser cooling water. Attach thimbles containing dried test portions to extraction columns. Put sufficient amount of solvent into each extraction cup to cover test portion when thimbles are in boiling position. Place cups under extraction columns and secure in place. Make sure that cups are matched to their corresponding thimble. Lower thimbles into solvent and boil for 20 min. Verify proper reflux rate which is critical to the complete extraction of fat. This rate depends upon the equipment and should be supplied by the manufacturer. A reflux rate of ca 3–5 drops/s applies to many extraction systems.

Raise thimbles out of solvent and extract in this position for 40 min. Then distill as much solvent as possible from cups to reclaim solvent and attain apparent dryness.

Remove extraction cups from extractor and place in operating fume hood to finish evaporating solvent at low temperature. (*Note:* Take care not to pick up any debris on bottom of extraction cup while in hood. Let cups remain in hood until all traces of solvent are gone.)

Dry extraction cups in 102° ± 2°C oven for 30 min to remove moisture. Excessive drying may oxidize fat and give high results. Cool in desiccator to room temperature and weigh to nearest 0.1 mg (F).

F. Calculations

$$\% \text{ Crude fat, hexanes extract} = \frac{F - T}{S} \times 100$$

where F = weight of cup + fat residue, g; T = weight of empty cup, g; S = test portion weight, g.

References: *J. AOAC Int.* **86**, 888(2003); 899(2003).

Subchapter 6
FIBER

4.6.01

AOAC Official Method 962.09
Fiber (Crude) in Animal Feed and Pet Food

Ceramic Fiber Filter Method
First Action 1962
Final Action 1971
Revised First Action 1982

AOCS–AOAC Method

A. Principle

Crude fiber is loss on ignition of dried residue remaining after digestion of sample with 1.25% (w/v) H_2SO_4 and 1.25% (w/v) NaOH solutions under specific conditions. Method is applicable to materials from which the fat can be and is extracted to obtain a

ANEXO C: CERTIFICADO DE CALIBRACION DE LA BALANZA ANALÍTICA

Elicrom Cia. Ltda.

CERTIFICADO DE CALIBRACIÓN

Ciudadela Guayaquil, calle 1era mz 21 solar 10
Guayaquil - Ecuador Pbx: 04-2282007 Fax: ext. 403
http://www.elicrom.com mail: ventas@elicrom.com

CERTIFICADO NÚMERO 1859-09-15

Servicio de Acreditación Ecuatoriano
Acreditación N° OAE LC C 16-009
LABORATORIO DE CALIBRACIÓN

IDENTIFICACIÓN DEL CLIENTE

EMPRESA: ECUACHEMLAB LABORATORIO QUIMICO Y MICROBIOLOGICO DEL ECUADOR CIA. LTDA.
DIRECCIÓN: PASAJE S/N N3-62 Y SIMON BOLIVAR, ARMENIA 1
TELÉFONO: 3614718

IDENTIFICACIÓN DEL EQUIPO

EQUIPO:	BALANZA ANALITICA	UNIDAD DE MEDIDA:	Gramos (g)
MARCA:	METTLER TOLEDO	RESOLUCIÓN (d):	0,0001
MODELO:	AX205	VALOR DE VERIFICACIÓN (e):	0,001
SERIE:	1125061710	CAPACIDAD MÁXIMA:	220
CÓDIGO:	EAFQ-009	CAPACIDAD MÍNIMA (OIML):	0,1
CLASE DE EXACTITUD (OIML):	I ESPECIAL	UBICACIÓN:	LABORATORIO FISICO QUIMICO

PATRÓN/EQUIPO(S) UTILIZADO (S)

CÓDIGO	NOMBRE	MARCA	CLASE	SERIE	FECHA CAL.	FECHA PROX. CAL.
EL.PT.404	JUEGO DE PESAS 50 mg - 200 g	KERN	CLASE E2	G1326511	17-dic-13	17-dic-15
EL.PT.054	BAROMETRO	CONTROL COMPANY	1081	140380202	02-jun-14	02-jun-16
EL.PT.037	TERMOHIGRÓMETRO	TAYLOR	1523	NO ESPECIFICA	14-jul-15	14-ene-16

CALIBRACIÓN

PROCEDIMIENTO: PEC.EL.01 CONDICIONES AMBIENTALES: Temperatura máxima °C 21,1 Temperatura mínima °C 21,1
MÉTODO EMPLEADO: COMPARACIÓN DIRECTA CON PESAS PATRÓN

ENSAYO DE EXCENTRICIDAD

UBICACIÓN	INDICACIÓN	ERROR	E.M.P.	¿CUMPLE?
No. 1	199,9996	-0,0004	0,0020	Cumple
No. 2	199,9995	-0,0005	0,0020	Cumple
No. 3	199,9996	-0,0004	0,0020	Cumple
No. 4	199,9998	-0,0002	0,0020	Cumple
No. 5	199,9997	-0,0003	0,0020	Cumple

LINEALIDAD / HISTÉRESIS

Nominal de masa	0,05	0,1	1	50	110	150	170	190	215	220
Lectura balanza ↑	0,0500	0,1000	1,0000	50,0000	109,9995	149,9993	169,9996	189,9993	214,9997	219,9996
Lectura balanza ↓	0,0500	0,1000	1,0000	50,0001	109,9996	149,9992	169,9996	189,9995	214,9993	
Masa certificada	0,05000	0,100001	1,000011	50,000010	109,999961	149,999970	169,999968	189,999985	215,000000	220,000138
Incert. Patrón	0,000004	0,0000050	0,000010	0,000030	0,000070	0,000080	0,00011	0,00013	0,00012	0,00013
Error de Histéresis	0,0000	0,0000	0,0000	0,0001	0,0001	0,0001	0,0000	0,0002	0,0004	0,0000
Error de Linealidad	0,0000	0,0000	0,0000	0,0001	-0,0005	-0,0007	-0,0004	-0,0006	-0,0005	-0,0004
E.M.P. *	0,0010	0,0010	0,0010	0,0010	0,0020	0,0020	0,0020	0,0020	0,0030	0,0030
¿CUMPLE?	Cumple	Cumple	Cumple	Cumple	Cumple	Cumple	Cumple	Cumple	Cumple	Cumple

ENSAYO DE REPETIBILIDAD

No. Pesada	Indicación
No. 1	99,9996
No. 2	99,9996
No. 3	99,9997
No. 4	99,9998
No. 5	99,9996
No. 6	99,9996
E.M.P	0,0020
MAX-MIN	0,0002
¿CUMPLE?	Cumple

ECUACIÓN DE INCERTIDUMBRE TOTAL

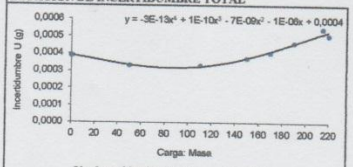

U = Incertidumbre (K=2) X = Masa

INCERTIDUMBRES (Ejemplo: Valor Más Alto del Ensayo)

Contribución a la incertidumbre por:	Tipo de Distribución:	Coef. de Sensibilidad	Incertidumbre Gramos (g)
Repetibilidad	T de Students	1	0,0000837
Resolución	Rectangular	1	0,0000289
Excentricidad	Conv. rect/trian.	1	0,0000601
Linealidad	Gaussiana	1	0,0001715
Histéresis	Gaussiana	1	0,0000000
Deriva de los instrumentos	Rectangular	1	0,0000719
Efecto de convección	Rectangular	1	0,0000299
Peso Patrón/Densidad del aire	Gaussiana	1	0,0001308
SUMA DE CUADRADOS			0,000000064
Incertidumbre Combinada			0,00025
Grados Efectivos de Libertad (Veff)			418
Factor de Cobertura (K)			2,0
INCERTIDUMBRE ALEATORIA (EXPANDIDA)			0,00051

DECLARACIÓN DE CONFORMIDAD

La balanza cumple los requisitos 3.6.1 (Repetibilidad), 3.6.2 (Excentricidad) y 3.5 (Errores Máximos Permitidos) de la OIML R 76-1:2006

OBSERVACIONES

* e.m.p = Error Máximo Permitido por la OIML R 76-1:2006

El cálculo de la incertidumbre expandida se realizó en base a la guía OAE G02 R01, multiplicando la incertidumbre típica por el factor de cobertura (k=2,00), que para una distribución de t de Student con (Veff = 418) grados efectivos de libertad corresponde a una probabilidad de cobertura de aproximadamente el 95,45%. La incertidumbre típica de medición se ha determinado conforme al documento EA-4/02. Este certificado no podrá reproducirse excepto en su totalidad sin la aprobación escrita del laboratorio Elicrom Calibración. El presente certificado se refiere solamente al equipo arriba descrito al momento del ensayo.

CALIBRACIÓN REALIZADA POR: Marlon Muñoz

FECHA DE CALIBRACIÓN: 31 de agosto de 2015 FECHA PRÓXIMA agosto-16

ANEXO D: CERTIFICADO DE CARACTERIZACIÓN DE LA ESTUFA

ELICROM Cía. Ltda.

CERTIFICADO DE CARACTERIZACIÓN

Ciudadela Guayaquil, calle 1era mz 21 solar 10
Guayaquil - Ecuador Pbx: 04-2282007 Fax: ext. 403
http://www.elicrom.com mail: ventas@elicrom.com

CERTIFICADO No: 1859-06-15

Servicio de Acreditación Ecuatoriano
Acreditación N° OAE LE C 10-010
LABORATORIO DE ENSAYOS

IDENTIFICACIÓN DEL CLIENTE

EMPRESA:	ECUACHEMLAB LABORATORIO QUIMICO Y MICROBIOLOGICO DEL ECUADOR CIA. LTDA.
DIRECCIÓN:	PASAJE S/N N3-62 Y SIMON BOLIVAR, ARMENIA 1
TELÉFONO:	3614718

IDENTIFICACIÓN DEL EQUIPO

EQUIPO:	ESTUFA
MARCA:	MEMMERT
MODELO/TIPO:	SM400
SERIE:	b401.0465
CÓDIGO CLIENTE:	EAFQ-010
UNIDAD DE MEDIDA:	°C
CAPACIDAD O RANGO:	220
RESOLUCIÓN:	1
UBICACIÓN DEL EQUIPO:	LABORATORIO FISICO QUIMICO
LUGAR DE CARACTERIZACIÓN:	LABORATORIO FISICO QUIMICO

PATRONES UTILIZADOS

CODIGO	NOMBRE	MARCA	MODELO	SERIE	FECHA CAL.	PROX. CAL
EL.PT.410	TERMOMETRO DIGITAL	CENTER	309	140801499	08-nov-14	08-nov-15
EL.PT.036	TERMOHIGROMETRO	TAYLOR	1523	NO ESPECIFICA	31-mar-15	30-sep-15

CARACTERIZACIÓN

MÉTODO: COMPARACIÓN MEDIANTE SENSORES PATRÓN DE TEMPERATURA

PROCEDIMIENTO: PEC.EL.08

CONDICIONES AMBIENTALES: 23,8 °C 50,0 %HR

DESCRIPCIÓN DE LA CARACTERIZACIÓN.- Se programa el registro automático de un sensor de temperatura (Datalogger) ubicado en el centro geométrico del espacio de trabajo, en intervalos de un minuto durante un mínimo de 30 minutos. Las lecturas son tomadas luego de que el equipo ha alcanzado la estabilidad en el valor de temperatura programado. Los datos se almacenan en el Datalogger y posteriormente son descargados y analizados en una computadora.

Ventilación:	NATURAL
No de Puertos:	1
Posición de los puertos:	SEMIABIERTO
Ubicación del sensor:	CENTRO DE LA CAMARA
Sobre escalón No:	3

UBICACIÓN DEL SENSOR DE REFERENCIA

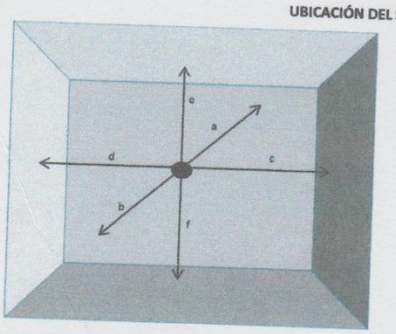

●	sensor	
a=	16,5	cm
b=	16,5	cm
c=	20	cm
d=	20	cm
e=	20	cm
f=	20	cm

Indicación de temperatura durante el ensayo. Lecturas en el indicador del equipo bajo prueba

minutos	valor
0	132
5	132
10	132
15	132
20	132
25	132
30	132

ELICROM A/S. ASEGURAMIENTO DE CALIDAD

Elicrom Cia. Ltda.	**CERTIFICADO DE CARACTERIZACIÓN** Ciudadela Guayaquil, calle 1era mz 21 solar 10 Guayaquil - Ecuador Pbx: 04-2282007 Fax: ext. 403 http://www.elicrom.com mail: ventas@elicrom.com CERTIFICADO No: 1859-06-15	Servicio de Acreditación Ecuatoriano Acreditación N° OAE LE C 10-010 LABORATORIO DE ENSAYOS

PERFIL TÉRMICO

128,8@13:53:02

ESTUFA

MEMMERT

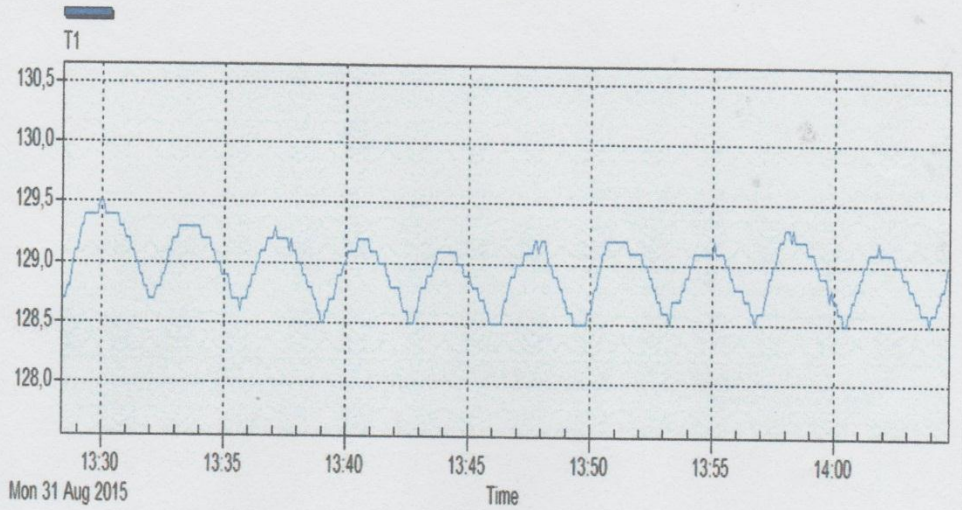

Valor programado en el Controlador del equipo bajo prueba (set point)	Tolerancia del Equipo (por el cliente) (±)	Temperatura media en el sensor de referencia	Temperatura media en el indicador del equipo bajo prueba	Corrección de la indicación	Estabilidad (En el tiempo)	Incertidumbre de medición
°C	°C	°C	°C	°C	°C	°C
130	3	129,0	132	-3	1	1,2

OBSERVACIONES:

El cálculo de la incertidumbre expandida se realizó en base a la guía OAE G02 R01, multiplicando la incertidumbre típica por el factor de cobertura (k=2,00), que para una distribución de t de Student con (Vef = ∞) grados efectivos de libertad corresponde a una probabilidad de cobertura de aproximadamente el 95,45%. La incertidumbre típica de medición se ha determinado conforme al documento EA-4/02. Este certificado no podrá reproducirse excepto en su totalidad sin la aprobación escrita del laboratorio Elicrom Calibración. El presente certificado se refiere solamente al equipo arriba descrito al momento del ensayo. Los resultados indicados son válidos unicamente para la ubicación del sensor de referencia y abarca un cubo espacial de 5cm de arista de dicha ubicación. Las demás partes del volumen de la cámara no se considera caracterizada. La temperatura del aire en el lugar de medición se obtiene sumando la temperatura del indicador de la cámara más la corrección de la indicación.

CARACTERIZACIÓN REALIZADA POR: Juan Carlos Alava

FECHA REALIZACIÓN: 31-ago-15 **FECHA PROXIMA:** ago-16

ELICROM ASEGURAMIENTO DE CALIDAD A/S.

AUTORIZADO POR:
Ing. Sabino Pineda
GERENTE TÉCNICO

RECIBIDO POR:
RESPONSABLE - CLIENTE

ANEXO E: CERTIFICADO DEL HEXANO

R-041

Certificate of Analysis

1.04374.4000 n-Hexane for analysis EMSURE® ACS,Reag. Ph Eur
Batch K46672974

	Batch Values	
Purity (GC)	≥ 96.0	%
Purity Σ hexane isomers + methylcyclopentane (GC)	≥ 98.5	%
Identity (IR)	conforms	
Colour	≤ 10	Hazen
Water-soluble titrable acid	≤ 0.0003	meq/g
Refractive index (n 20/D)	1.375 - 1.376	
Density (d 20 °C/20 °C)	0.659 - 0.663	
Boiling range (min.95 %)	67 - 69	°C
Transmission (between 260 nm and 420 nm)	≥ 97	%
Thiophene	conforms	
Aromatics (as benzene)	≤ 0.01	%
Sulfur compounds (as S)	≤ 0.005	%
Readily carbonizable substances	conforms	
Al (Aluminium)	≤ 0.00005	%
B (Boron)	≤ 0.000002	%
Ba (Barium)	≤ 0.00001	%
Ca (Calcium)	≤ 0.00005	%
Cd (Cadmium)	≤ 0.000005	%
Co (Cobalt)	≤ 0.000002	%
Cr (Chromium)	≤ 0.000002	%
Cu (Copper)	≤ 0.000002	%
Fe (Iron)	≤ 0.00001	%
Mg (Magnesium)	≤ 0.00001	%
Mn (Manganese)	≤ 0.000002	%
Ni (Nickel)	≤ 0.000002	%
Pb (Lead)	≤ 0.00001	%
Sn (Tin)	≤ 0.00001	%
Zn (Zinc)	≤ 0.00001	%
Evaporation residue	≤ 0.001	%
Water	≤ 0.01	%

Date of release (DD.MM.YYYY) 28.04.2015
Minimum shelf life (DD.MM.YYYY) 30.04.2020

Dr. Michael Savelsberg
Responsible laboratory manager quality control

This document has been produced electronically and is valid without a signature.

Merck KGaA, Frankfurter Straße 250, 64293 Darmstadt (Germany): +49 6151 72-0

Page 1 of 1

ANEXO F: MATERIAL DE REFERENCIA CEREALES

National Institute of Standards & Technology

Certificate of Analysis

Standard Reference Material® 3233

Fortified Breakfast Cereal

This Standard Reference Material (SRM) is intended primarily for validation of methods for determining proximates, sugars, dietary fiber, vitamins, elements, and amino acids in fortified breakfast cereals and similar materials. This SRM can also be used for quality assurance when assigning values to in-house reference materials. The SRM is a wheat-based fortified breakfast cereal prepared by a commercial manufacturer. A unit of SRM 3233 consists of one bottle containing approximately 60 g of material and sealed inside an aluminized pouch.

Certified Mass Fraction Values: The certified mass fraction values of selected elements and vitamins in SRM 3233 are provided in Tables 1 and 2, respectively. A NIST certified value is a value for which NIST has the highest confidence in its accuracy in that all known or suspected sources of bias have been investigated or taken into account [1]. Analyses for value assignment were performed by NIST and collaborating laboratories. Certified values were calculated as the mean of the mean values from NIST methods, the mean from U.S. Department of Agriculture (USDA) methods, and the median of the mean results provided by collaborating laboratories, where appropriate. All values were combined without weighting. The associated uncertainties are expressed at the 95 % level of confidence [2–4]. Values are reported on a dry-mass basis in mass fraction units [5].

Reference Mass Fraction Values: Reference mass fraction values are provided for additional elements (Table 3), vitamins (Table 4), proximates, sugars, and calories (Table 5), dietary fiber (Table 6), and amino acids (Table 7). A NIST reference value is a noncertified value that is the best estimate of the true value based on available data; however, the value does not meet the NIST criteria for certification [1] and is provided with associated uncertainties that may reflect only measurement reproducibility, may not include all sources of uncertainty, or may reflect a lack of sufficient statistical agreement among multiple analytical methods. The reference mass fraction values were derived from results reported by NIST or collaborating laboratories. Values are reported on a dry-mass basis in mass fraction units [5].

Information Mass Fraction Values: Information mass fraction values for several elements determined using a single method at NIST are provided in Table 8. Information mass fraction values for several forms of dietary fiber determined by a single collaborating laboratory are provided in Table 9. A NIST information value is a value that may be of interest to the SRM user, but insufficient information is available to assess the uncertainty associated with the value, therefore no uncertainty is provided. Values are reported on a dry-mass basis in mass fraction units [5].

Expiration of Certification: The certification of **SRM 3233** is valid, within the measurement uncertainty specified, until **20 June 2017**, provided the SRM is handled and stored in accordance with the instructions given in this certificate (see "Instructions for Storage and Use"). The certification is nullified if the SRM is damaged, contaminated, or otherwise modified.

Maintenance of SRM Certification: NIST will monitor this SRM over the period of its certification. If substantive technical changes occur that affect the certification before the expiration of this certificate, NIST will notify the purchaser. Registration (see attached sheet or register online) will facilitate notification.

Coordination of the technical measurements leading to the certification of this SRM was performed by K.E. Sharpless and L.J. Wood of the NIST Chemical Sciences Division and S. Ehling of the Grocery Manufacturers Association (GMA, Washington, DC).

Carlos A. Gonzalez, Chief
Chemical Sciences Division

Robert L. Watters, Jr., Director
Office of Reference Materials

Gaithersburg, MD 20899
Certificate Issue Date: 05 September 2014
Certificate Revision History on Last Page

SRM 3233

Page 1 of 11

Analytical measurements at NIST were performed by C. Bryan, J. Camara, S.K.R. Chinthalapati, W.C. Davis, L. Francini, J.L. Molloy, I.O. Mugenya, K.E. Murphy, Y. Nuevo Ordóñez, R. Oflaz, D.J. O'Kelly, T.O. Okumu, R.L. Paul, M.M. Phillips, B.J. Porter, C.A. Rimmer, J.B. Thomas, B.E. Tomlin, T.W. Vetter, L.J. Wood, and L.L. Yu of the NIST Chemical Sciences Division. Analyses for value assignment were also performed by R. Goldschmidt and W.R. Wolf of the Food Composition Methods Development Laboratory, Agricultural Research Service, USDA (Beltsville, MD), and the following laboratories participating in a GMA Food Industry Analytical Chemists Committee's (FIACC's) interlaboratory comparison exercise: Campbell Soup Company, Camden, NJ; Conagra Foods, Omaha, NE; Covance, Inc., Madison, WI; Del Monte Foods, Walnut Creek, CA; Eurofins Central Analytical Laboratories, Metairie, LA; Eurofins Scientific, Des Moines, IA; General Mills, Inc., Golden Valley, MN; Hormel Foods Corporation, Austin, MN; Krueger Food Laboratories, Billerica, MA; Land O'Lakes, Arden Hills, MN; Schwan Food Company, Salina, KS; Silliker, Madison, WI; The J.M. Smucker Co., Orville, OH; The National Food Laboratory, Livermore, CA. Five of these laboratories measured sugars: Campbell Soup Company; Covance, Inc.; Eurofins Central Analytical Laboratories; Hormel Foods Corporation; and Krueger Food Laboratories. Four of the laboratories plus one other measured dietary fiber: Covance, Inc.; Eurofins Central Analytical Laboratories; General Mills, Inc.; Megazyme International Ireland Ltd., Bray, County Wicklow, Ireland; and Silliker.

Statistical analysis was provided by J.H. Yen of the NIST Statistical Engineering Division.

Support aspects involved in the issuance of this SRM were coordinated through the NIST Office of Reference Materials.

NOTICE TO USERS: SRM 3233 IS INTENDED FOR LABORATORY USE ONLY, NOT FOR HUMAN CONSUMPTION.

INSTRUCTIONS FOR STORAGE AND USE

Storage: The SRM should be stored at controlled room temperature (20 °C to 25 °C) in the original unopened bottles. For elemental analyses, the bottle can be re-capped and test portions removed and analyzed until the material reaches its expiration date. For vitamin analyses, the bottle can be re-capped and test portions removed and analyzed for several months after the bottle was first opened. Water-soluble vitamins are stable in previously opened and tightly recapped bottles for at least one year when stored at room temperature or under refrigeration (4 °C).

Use: Before use, the contents of the bottle should be mixed thoroughly by rotating and/or rolling. Allow the contents to settle for one minute prior to opening to minimize the loss of fine particles. For certified values to be valid, test portions of the following masses should be used: between 0.3 g and 0.5 g for elemental analysis and between 0.5 g and 10 g for vitamin analysis. Test portions should be analyzed as received and results converted to a dry-mass basis by determining moisture content (using one of the methods described below) on a separate test portion. Results obtained in analyses should include their own estimates of uncertainty and can be compared to the certified values using procedures described in reference 6.

SOURCE, PREPARATION, AND ANALYSIS[1]

Source and Preparation: The SRM is a fortified breakfast cereal. Two hundred kilograms (440 lbs) of fortified breakfast cereal was received as flakes in a single large box. The contents of the box were ground to 180 µm (80 mesh), blended, and bottled by High-Purity Standards (Charleston, SC). The cereal powder was placed in 4 oz amber bottles that had been flushed with nitrogen. Each bottle contains 60 g of cereal powder. The bottles were capped and sealed with heat-shrink tape, then individually sealed in Mylar bags. Following bottling, SRM 3233 was irradiated by Neutron Products, Inc. (Dickerson, MD) to an absorbed dose of 9.0 kGy to 11.5 kGy.

Analytical Approach for Determination of Elements: Value assignment of the mass fractions of the elements in SRM 3233 was based on the combination of measurements from two different analytical methods at NIST and collaborating laboratories, where available. NIST provided measurements by using inductively coupled plasma optical emission spectrometry (ICP-OES), inductively coupled plasma mass spectrometry (ICP-MS), isotope dilution inductively coupled plasma mass spectrometry (ID-ICP-MS), instrumental neutron activation analysis (INAA), and radiochemical neutron activation analysis (RNAA).

---

[1] Certain commercial equipment, instruments or materials are identified in this certificate to adequately specify the experimental procedure. Such identification does not imply recommendation or endorsement by the National Institute of Standards and Technology, nor does it imply that the materials or equipment identified are necessarily the best available for the purpose.

NIST Analyses for Ba, Ca, Cr, Co, Cu, Fe, I, K, Mg, Mn, Mo, Na, Ni, P, Sn, Sr, V, and Zn Using ICP-OES and/or ICP-MS: Barium, calcium, copper, iron, magnesium, manganese, phosphorus, potassium, sodium, strontium, and zinc were measured by ICP-OES using duplicate 0.5 g test portions taken from each of 10 bottles of SRM 3233. Samples for ICP-OES were digested in a nitric acid/hydrofluoric acid mixture using a microwave sample preparation system. Barium, chromium, cobalt, molybdenum, nickel, strontium, tin, and vanadium were measured by ICP-MS in duplicate 0.25 g test portions taken from each of 10 bottles. Samples were digested in nitric acid using a microwave sample preparation system. Iodine was measured by ICP-MS in single 0.3 g test portions taken from each of six bottles. Samples were digested in aqueous tetramethylammonium hydroxide using a microwave sample preparation system. Quantitation for ICP-OES and ICP-MS was based on the method of standard additions. Tin was not homogeneously distributed in SRM 3233, with values ranging between 0.04 µg/g and 0.3 µg/g, and a value for tin could not be assigned (see "Homogeneity Assessment"). Similarly, values for chromium ranged from 3 µg/g to 5 µg/g, values for nickel ranged from 2 µg/g to 4 µg/g, and values were not assigned.

NIST Analyses for Cd and Pb Using Isotope Dilution ICP-MS: Cadmium and lead were measured by ID-ICP-MS using duplicate 0.5 g test portions taken from each of six bottles of SRM 3233. Samples were spiked with ^{111}Cd and ^{206}Pb and were digested in nitric acid using a microwave sample preparation system. Sample digests were evaporated to near dryness and a portion was reconstituted in dilute nitric acid for Pb analysis. To remove spectral interferences in the cadmium determination, the remaining portions of the sample digests were evaporated to dryness and reconstituted in water and concentrated hydrochloric acid to convert the nitrate form to the chloride. Samples were evaporated to dryness and again reconstituted in concentrated hydrochloric acid, which was again evaporated. Salts were dissolved in hydrochloric and hydrofluoric acids and loaded onto an anion exchange resin. Interferents were eluted using hydrochloric and hydrofluoric acids. The cadmium-containing fraction was eluted using nitric acid. This fraction was evaporated to dryness and redissolved in nitric acid prior to analysis. Lead was not homogeneously distributed in SRM 3233, with values ranging between 0.04 µg/g and 0.4 µg/g, and a value for lead could not be assigned (see "Homogeneity Assessment").

NIST Analysis for As Using RNAA: Arsenic was measured by RNAA using single 0.25 g test portions taken from each of six bottles of SRM 3233. Individual disks were formed from the test portions using a stainless steel die and hydraulic press. Samples were packaged individually in clean polyethylene bags and irradiated in one polyethylene irradiation vessel for 5 h at 20 MW, which provided a thermal neutron fluence rate of 3×10^{13} cm^{-2}s^{-1}. Samples were combined with ^{77}As prior to chemical separation. Samples were dissolved in a mixture of nitric and perchloric acids, and arsenic separated from the matrix as described in reference 7. The 559 keV line from decay of ^{76}As was used for quantitation. The 239 keV line from decay of ^{77}As was evaluated for yield determination.

NIST Analyses for Al, Cl, Cr, Fe, Mg, Mn, Mo, Na, V, and Zn Using INAA: Aluminum, chlorine, chromium, iron, magnesium, manganese, molybdenum, sodium, vanadium, and zinc were measured by INAA using duplicate 0.225 g test portions taken from each of six bottles of SRM 3233. Powders were pressed into cylindrical pellets, and samples, standards, and controls were packaged individually in clean polyethylene bags and irradiated individually at 20 MW. For analysis of the short-lived nuclides (aluminum, chlorine, magnesium, manganese, sodium, and vanadium) by INAA, each sample, standard, or control material was individually irradiated together with one flux monitor foil for 60 s at a reactor power of 20 MW. The count was done after 5 min decay at a sample-to-detector distance of 14 cm for 5 min counting time. For the analysis of chromium, iron, molybdenum, and zinc samples by INAA, standards, and controls were irradiated for 4 h; irradiation capsules were then inverted 180 degrees, and materials were irradiated another 4 h. Molybdenum was counted for 8 h after a decay of more than 168 h. Chromium, cobalt, iron, and zinc were counted for 8 h after a decay of more than 120 days.

Analytical Approach for Determination of Vitamins: Value assignment of the mass fractions of the vitamins in SRM 3233 was based on the combination of results provided from various analytical methods at NIST, USDA, and collaborating laboratories.

NIST Analyses for Fat-Soluble Vitamins: Vitamin A (as retinyl palmitate) and vitamin E (as α-tocopheryl acetate) were measured at NIST using liquid chromatography with mass spectrometric detection (LC/MS). Calibrants were prepared gravimetrically, at levels intended to approximate the levels of the fat-soluble vitamins in the SRM. Internal standards were employed; a single solution was used for the calibrants and samples.

Retinyl Palmitate and α-Tocopheryl Acetate: Duplicate 10 g test portions of powder from each of 12 bottles were accurately weighed into 50 mL polyethylene centrifuge tubes, and internal standard solutions containing tocol and retinyl palmitate-d_4 were added. Analytes were extracted into hexane by sonication and mixing/rotation for 60 min three times. Three additional extractions were performed using sonication in ethyl acetate and 60 min of mixing/rotation three times. The supernatants for the individual test portions were combined and were evaporated to approximately 25 mL under nitrogen. The extracts were washed with water, the organic phase was evaporated to dryness, and the residue was reconstituted in ethanol. Separations were performed on a C_{18} column with an isocratic

mobile phase of 60 % methanol and 40 % acetonitrile containing 5 mmol/L ammonium acetate. Retinyl palmitate, retinyl palmitate-d_4, tocol, and α-tocopheryl acetate were monitored at *m/z* 269, *m/z* 273, *m/z* 388, and *m/z* 473, respectively. Retinyl palmitate was not homogeneously distributed in SRM 3233, with values ranging between 2 µg/g and 12 µg/g, and a value for retinol could not be assigned (see "Homogeneity Assessment").

NIST Analyses for Water-Soluble Vitamins: Water-soluble vitamins were measured by using LC methods with absorbance detection, MS, or isotope dilution (ID) tandem mass spectrometry (MS/MS). Calibrants were prepared gravimetrically, at levels intended to approximate the levels of the vitamins in the SRM. In cases where an internal standard was employed, a single solution was used for the calibrants and samples.

Ascorbic Acid: Ascorbic acid (vitamin C) was measured by LC using a C_{18} column with absorbance detection at 243 nm. Duplicate 2 g test portions from each of 10 bottles were dissolved in 30 g to 35 g of HPLC-grade water. An internal standard, 4-pyridoxic acid, was added. Metaphosphoric acid was added to stabilize the vitamin C in the mixture. Dithiothreitol was added to the mixture to convert dihydroascorbic acid to total ascorbic acid. The mixture was sonicated for 30 min and centrifuged at room temperature for 15 min. A 1 mL aliquot of the test mixture was removed and filtered using a 0.45 µm nylon filter prior to analysis using a gradient LC method with a potassium phosphate (dibasic)/acetonitrile mobile phase.

Thiamine, Riboflavin, Niacinamide, Niacin, Pantothenic Acid, Pyridoxine, and Pyridoxal: Thiamine, riboflavin, niacinamide, niacin, pantothenic acid, pyridoxine, and pyridoxal were measured by LC/MS in duplicate 0.5 g test portions taken from each of 12 bottles. Six internal standards were added: $^{13}C_3$-thiamine chloride; $^{2}H_4$-niacinamide; $^{2}H_4$-niacin; calcium $^{13}C_3$,^{15}N-pantothenate; $^{13}C_4$-pyridoxine hydrochloride; and $^{2}H_3$-pyridoxal hydrochloride. The analytes and internal standards were extracted into dilute acetic acid for analysis by positive-ion mode LC/MS. A gradient method with an ammonium formate buffer/methanol mobile phase and a C_{18} column were used for LC/MS determination of vitamins B_1 hydrochloride, B_2, and pyridoxine, niacinamide, niacin, pantothenic acid, and pyridoxal. Thiamine and $^{13}C_3$-thiamine were measured at *m/z* 265 and *m/z* 268, respectively. Niacinamide and $^{2}H_4$-niacinamide were measured at *m/z* 123 and *m/z* 127, respectively. Niacin and $^{2}H_4$-niacin were measured at *m/z* 124 and *m/z* 128, respectively. Pantothenic acid and $^{13}C_3$,^{15}N-pantothenic acid were measured at *m/z* 220 and *m/z* 224, respectively. Pyridoxine and $^{13}C_4$-pyridoxine were measured at *m/z* 170 and *m/z* 174, respectively. Pyridoxal and $^{2}H_3$-pyridoxal were measured at *m/z* 168 and *m/z* 171, respectively. Riboflavin was measured at *m/z* 377, with $^{13}C_4$-pyridoxine as the internal standard.

Cyanocobalamin: Cyanocobalamin (vitamin B_{12}) was measured in two 2.0 g test portions taken from each of six bottles. Cyanocobalamin was extracted into deionized water, samples were centrifuged, and the supernatants were filtered through 0.45 µm nylon filters. Yttrium was added as an internal standard. The samples were analyzed for cyanocobalamin, inorganic cobalt, and yttrium using a C_{18} column, a mobile phase of ethylenediaminetetraacetic acid in methanol and water, and inductively coupled plasma mass spectrometry (ICP-MS) with detection at *m/z* 59 for cyanocobalamin and *m/z* 89 for yttrium.

Folic Acid: Folic acid measurements were made on two 1.0 g test portions taken from each of 12 bottles. Internal standard $^{13}C_5$-folic acid was added. A sodium phosphate buffer containing ascorbic acid was added, and samples were vortex-mixed, subjected to gentle shaking at 37 °C, boiled, and cooled on ice. Supernatants from centrifuged samples were filtered through 0.45 µm filters. The filtered supernatants were analyzed for folic acid and $^{13}C_5$-folic acid by positive mode LC/MS/MS. A gradient LC method with a water/acetonitrile/formic acid mobile phase and a C_{18} reversed-phase column were used for the determination of both folic acid and $^{13}C_5$-folic acid. The transitions *m/z* 442.4 → *m/z* 295.1 and *m/z* 447.4 → *m/z* 295.1 were monitored for folic acid and $^{13}C_5$-folic acid, respectively.

USDA Analyses for Water-Soluble Vitamins: Thiamine, riboflavin, niacinamide, pantothenic acid, pyridoxine, and folic acid were measured by using ID-LC/MS. Thiamine, niacinamide, and pyridoxine were measured in the same sample extracts using hydrophilic interaction chromatography (HILIC) with ID-MS. Using newly prepared samples, the six vitamins were measured using ultra performance liquid chromatography (UPLC) methods with ID-MS. Results from the methods were similar and were therefore considered as a single data set, with the uncertainty as the standard error of the mean.

Collaborating Laboratories' Analyses: The GMA FIACC laboratories were asked to use their usual methods to make single measurements of proximates, calories, vitamins, elements, and amino acids on test portions taken from each of two bottles of SRM 3233. In a second exercise, a subset of these laboratories measured sugars in each of two bottles. In a third exercise, several GMA laboratories and one other laboratory measured dietary fiber in each of six bottles using four AOAC Official Methods of Analysis: 985.29 Total Dietary Fiber in Foods (Enzymatic-Gravimetric Method); 991.42 Insoluble Dietary Fiber in Foods and Food Products (Enzymatic-Gravimetric Method, Phosphate Buffer); 2009.01 Total Dietary Fiber in Foods (Enzymatic-Gravimetric-Liquid Chromatographic Method); and 2011.25 Insoluble, Soluble, and Total Dietary Fiber in Foods (Enzymatic-Gravimetric-Liquid Chromatography) [8].

Because of variability among data provided by laboratories participating in an interlaboratory comparison exercise, the median of laboratory means is used, with the uncertainty estimated using the median absolute deviation (MADe) [9].

Determination of Moisture: Moisture content of SRM 3233 was determined at NIST (see "Instructions for Storage and Use") by (1) freeze-drying to constant mass over 7 days; (2) drying over magnesium perchlorate in a desiccator at room temperature for 28 days; and (3) drying for 2 h in a forced-air oven at 80 °C. Unweighted results obtained using all three techniques were averaged to determine a conversion factor of (0.983 ± 0.007) gram dry mass per gram as-received mass, which was used to convert data from an as-received to a dry-mass basis; the uncertainty shown on this value is an expanded uncertainty. An uncertainty component for the conversion factor (0.36 %) obtained from the moisture measurements is incorporated in the uncertainties of the certified and reference values, reported on a dry-mass basis, that are provided in this certificate.

Homogeneity Assessment: The homogeneity of vitamins and elements was assessed at NIST using the methods and test portion sizes described above. Homogeneity of constituents measured solely by collaborating laboratories (e.g., proximates) was not assessed, although the data were treated as though these analytes were homogeneously distributed. Retinyl palmitate and certain elements showed a lack of homogeneity; in these cases, either values are not provided (chromium, lead, nickel, tin, retinyl palmitate) or the uncertainties incorporate a component for inhomogeneity (cobalt, molybdenum). For the other elements and the vitamins, analysis of the variance did not show statistically significant heterogeneity.

Value Assignment: The collaborating laboratories reported the individual results for each of their analyses for a given analyte. The mean of each laboratory's results was then determined. For calculation of assigned values for analytes that were measured only by the collaborating laboratories, the median of the laboratory means was used. For analytes that were also measured by NIST, the median of the individual collaborating laboratory means, the USDA's mean, and the mean of the individual sets of NIST data were averaged, as appropriate.

Certified Mass Fraction Values for Elements: Each certified mass fraction value is the mean from the combination of the mean of results from analyses by NIST and the median of the mean of results provided by collaborating laboratories, where available. The uncertainty provided with each value is an expanded uncertainty about the mean to cover the measurand with approximately 95 % confidence. The expanded uncertainty is calculated as $U = ku_c$, where u_c incorporates the observed difference between the results from the methods and their respective uncertainties and an uncertainty component for moisture correction, consistent with the ISO/JCGM Guide and with its Supplement 1, and k is a coverage factor corresponding to approximately 95 % confidence [2–4]. The measurands are the total mass fractions of the elements in fortified breakfast cereal. The certified values are metrologically traceable to the SI unit of mass, expressed as milligrams per kilogram on a dry-mass basis.

Table 1. Certified Mass Fraction Values (Dry-Mass Basis) for Elements in SRM 3233

	Mass Fraction (mg/kg)			Coverage Factor, k
Barium[a,b]	2.766	±	0.033	2.00
Cadmium[c]	0.0819	±	0.0020	2.15
Calcium[a,d]	36910	±	920	2.00
Copper[a,d]	3.97	±	0.28	2.00
Iron[a,d,e]	766	±	36	2.00
Magnesium[a,d,e]	1093	±	37	2.00
Manganese[a,d,e]	33.1	±	1.1	2.00
Phosphorus[a,d]	2592	±	68	2.00
Potassium[a,d]	3060	±	140	2.00
Sodium[a,d,e]	6830	±	120	2.00
Strontium[a,b]	8.34	±	0.17	2.00
Zinc[a,d,e]	628	±	16	2.00

[a] NIST ICP-OES
[b] NIST ICP-MS
[c] NIST ID ICP-MS
[d] Collaborating laboratories
[e] NIST INAA

Certified Mass Fraction Values for Vitamins: Each certified mass fraction value is the mean from the combination of the mean results from each set of analyses by NIST, the median of the mean of results provided by collaborating laboratories, and the mean result provided by the material manufacturer, where available. The uncertainty provided with each value is an expanded uncertainty about the mean to cover the measurand with approximately 95 % confidence. The expanded uncertainty is calculated as $U = ku_c$, where u_c incorporates the observed difference between the results from the methods and their respective uncertainties and an uncertainty component for moisture correction, consistent with the ISO/JCGM Guide and with its Supplement 1, and k is a coverage factor corresponding to approximately 95 % confidence [2–4]. The measurands are the total mass fractions of the vitamins in fortified breakfast cereal. The certified values are metrologically traceable to the SI unit of mass, expressed as milligrams per kilogram on a dry-mass basis.

Table 2. Certified Mass Fraction Values (Dry-Mass Basis) for Vitamins in SRM 3233

	Mass Fraction (mg/kg)	Coverage Factor, k
Thiamine (Vitamin B_1)[a,b,c,e]	60.2 ± 9.4	2.00
Riboflavin (Vitamin B_2)[b,d,e]	76 ± 2	2.00
Niacinamide[c,e]	799 ± 27	2.00
Total Vitamin B_3 as Niacinamide[b,c,g]	822 ± 39	2.00
Pantothenic Acid[b,c,e]	540 ± 40	2.00
Pyridoxine[c,e]	78.0 ± 4.7	2.00
Total Vitamin B_6 as Pydridoxine[b,c,h]	81.9 ± 9.0	2.00
Folic Acid[b,e,f]	15.1 ± 1.2	2.00
Total α-Tocopherol (Vitamin E)[b,d,i]	1350 ± 220	2.00

[a] Reported as thiamine ion (265.36 g/mol), not thiamine chloride or thiamine chloride hydrochloride.
[b] Collaborating laboratories
[c] NIST ID-LC/MS
[d] NIST LC/MS
[e] USDA
[f] NIST ID-LC/MS/MS
[g] Measured as the sum of niacinamide and niacin, which was mathematically converted to niacinamide by multiplication by the ratio of the relative molecular masses.
[h] Measured as the sum of pyridoxine and pyridoxal, which was mathematically converted to pyridoxine by multiplication by the ratio of the relative molecular masses.
[i] α-Tocopherol was added to SRM 3233 as RRR-α-tocopheryl acetate. This certified value is expressed as α-tocopherol equivalents and includes "naturally occurring" α-tocopherol as well as the α-tocopherol acetate that was added.

Reference Mass Fraction Values for Elements: Each reference mass fraction value is the mean result of NIST analyses using one or two methods. The uncertainty provided is an expanded uncertainty about the mean to cover the measurand with approximately 95 % confidence. The expanded uncertainty is calculated as $U = ku_c$, where u_c represents the combined uncertainty, incorporating an uncertainty component for moisture correction, consistent with the ISO/JCGM Guide, and k is a coverage factor corresponding to approximately 95 % confidence [2]. The uncertainties for cobalt and molybdenum also incorporate an additional uncertainty component for possible inhomogeneity. The measurands are the mass fractions of the elements in fortified breakfast cereal as measured by the method indicated. The reference values are metrologically traceable to the SI unit of mass, expressed as milligrams per kilogram.

Table 3. Reference Mass Fraction Values (Dry-Mass Basis) for Elements in SRM 3233

	Mass Fraction (mg/kg)	Coverage Factor, k
Cobalt[a]	0.174 ± 0.033	2.57
Molybdenum[a]	1.61 ± 0.16	2.57
Vanadium[a,b]	0.297 ± 0.040	2.00

[a] NIST ICP-MS
[b] NIST INAA

Reference Mass Fraction Values for Selected Vitamins: Each reference mass fraction value is the mean result of a NIST analysis using a single method or the mean from the combination of NIST results with the median of the mean results provided by collaborating laboratories, where available. The uncertainty provided is an expanded uncertainty about the mean to cover the measurand with approximately 95 % confidence. The expanded uncertainty is calculated as $U = ku_c$, where u_c represents the combined uncertainty, incorporating an uncertainty component for moisture correction, consistent with the ISO/JCGM Guide, and k is a coverage factor corresponding to approximately 95 % confidence [2]. For values based on more than one data source, the combined uncertainty incorporates the observed difference between the results from the methods and their respective uncertainties, consistent with the ISO/JCGM Guide and with its Supplement 1 [2–4]. The measurands are the mass fractions of the vitamins in fortified breakfast cereal as measured by the method indicated. The reference values are metrologically traceable to the SI unit of mass, expressed as milligrams per kilogram.

Table 4. Reference Mass Fraction Values (Dry-Mass Basis) for Vitamins in SRM 3233

	Mass Fraction (mg/kg)			Coverage Factor, k
Ascorbic Acid (Vitamin C)[a,b]	2440	±	620	2.00
Niacin[c]	16.67	±	0.35	2.14
Pyridoxal[c]	2.25	±	0.19	2.20
Cyanocobalamin (Vitamin B_{12})[b,d]	0.210	±	0.040	2.00

[a] NIST LC/absorbance
[b] Collaborating laboratories
[c] NIST ID-LC/MS
[d] NIST LC-ICP-MS

Reference Values for Proximates, Sugars, Calories, and Dietary Fiber: Each reference value is the median of the mean results provided by collaborating laboratories. The uncertainty provided is an expanded uncertainty about the mean to cover the measurand with approximately 95 % confidence. The expanded uncertainty is calculated as $U = ku_c$, where u_c represents the combined uncertainty, incorporating an uncertainty component for moisture correction, consistent with the ISO/JCGM Guide, and k is a coverage factor corresponding to approximately 95 % confidence [2]. The measurands are the mass fractions of the proximates, sugars, calories, and dietary fiber in fortified breakfast cereal listed in Tables 5 and 6, as measured by the collaborating laboratories and the methods they used. The reference values for proximates, sugars, and dietary fiber are metrologically traceable to the SI unit of mass, expressed as a percent. The reference value for caloric content is metrologically traceable to unit kilocalorie per 100 grams.

Table 5. Reference Values (Dry-Mass Basis) for Proximates, Sugars, and Calories in SRM 3233

	Mass Fraction (%)	Coverage Factor, k
Ash	11.87 ± 0.25	2.11
Protein[a]	7.25 ± 0.18	2.13
Fat (as the sum of fatty acids as triglycerides)	2.02 ± 0.40	2.16
Hexadecanoic Acid (C16:0) (Palmitic Acid)	0.367 ± 0.072	2.23
Octadecanoic Acid (C18:0) (Stearic Acid)	0.173 ± 0.051	2.23
(Z)-9-Octadecenoic Acid (C18:1 n-9) (Oleic Acid)	0.278 ± 0.027	2.26
(Z,Z)-9,12-Octadecadienoic Acid (C18:2 n-6) (Linoleic Acid)	0.867 ± 0.155	2.26
(Z,Z,Z)-9,12,15-Octadecatrienoic Acid (C18:3 n-3) (α-Linolenic Acid)	0.056 ± 0.007	2.31
Carbohydrates	77.88 ± 0.86	2.03
Total Sugars	15.8 ± 1.5	2.78
Fructose	0.81 ± 0.39	2.78
Glucose	1.04 ± 0.36	2.78
Maltose	0.46 ± 0.09	4.30
Sucrose	13.42 ± 0.75	2.78

	Energy (kcal per 100 g)	Coverage Factor, k
Calories[b]	362.4 ± 3.8	2.03

[a] A factor of 5.7 was used to convert nitrogen results to protein.

[b] The reference value for calories is the median of lab mean caloric calculations from the interlaboratory comparison exercise. If the mean proximate values above are used for calculation, with caloric equivalents of 9, 4, and 4 for fat (as the sum of fatty acids), protein, and carbohydrate, respectively, the mean caloric content is 358.7 kcal/100 g.

Table 6. Reference Mass Fraction Values (Dry-Mass Basis) for Dietary Fiber in SRM 3233[a]

	Mass Fraction (%)	Coverage Factor, k
Composite Data for Dietary Fiber Obtained Using Four AOAC Methods[b]		
IDF + HMW SDF	9.19 ± 0.94	2.78
IDF	6.60 ± 0.45	2.78
LMW SDF	3.02 ± 0.61	2.78
HMW SDF	2.87 ± 0.61	2.78
TDF	12.24 ± 0.78	2.78
Based on Data Obtained Using AOAC 2011.25[c]		
IDF	6.6 ± 1.3	4.30
LMW SDF	3.0 ± 1.2	4.30
HMW DF	2.6 ± 1.5	4.30
TDF	11.9 ± 2.7	4.30
Based on Data Obtained Using AOAC 2009.01		
IDF + HMW SDF[b]	9.19 ± 0.94	2.78
LMW SDF[d]	2.92 ± 0.61	2.00
TDF[d]	12.53 ± 0.58	2.00
Based on Data Obtained Using AOAC 991.43		
SDF[d]	2.71 ± 0.84	2.00
TDF[d]	9.0 ± 1.2	2.00

[a] DF = dietary fiber
IDF = insoluble dietary fiber
HMW = high molecular weight
LMW = low molecular weight
SDF = soluble dietary fiber
TDF = total dietary fiber

[b] Data reported by five laboratories.
[c] Data reported by three laboratories.
[d] Data reported by two laboratories.

Reference Mass Fraction Values for Amino Acids: Each reference mass fraction value is the median of the mean results provided by collaborating laboratories. The uncertainty provided is an expanded uncertainty about the mean to cover the measurand with approximately 95 % confidence. The expanded uncertainty is calculated as $U = ku_c$, where u_c represents the combined uncertainty, incorporating an uncertainty component for moisture correction, consistent with the ISO/JCGM Guide, and k is a coverage factor corresponding to approximately 95 % confidence [2]. The measurands are the mass fractions of the amino acids in fortified breakfast cereal as measured by the collaborating laboratories and the methods they used. The reference values are metrologically traceable to the SI unit of mass, expressed as a percent.

Table 7. Reference Mass Fraction Values (Dry-Mass Basis) for Amino Acids in SRM 3233

	Mass Fraction (%)			Coverage Factor, k
Alanine	0.323	±	0.042	2.57
Arginine	0.322	±	0.067	2.57
Aspartic Acid	0.438	±	0.050	2.57
Cysteine	0.154	±	0.032	3.18
Glutamic Acid	2.25	±	0.22	2.57
Glycine	0.342	±	0.031	2.57
Histidine	0.162	±	0.034	2.57
Isoleucine	0.270	±	0.014	2.57
Leucine	0.550	±	0.047	2.57
Lysine	0.103	±	0.040	2.57
Methionine	0.139	±	0.019	2.78
Phenylalanine	0.373	±	0.033	2.57
Serine	0.375	±	0.062	2.57
Threonine	0.241	±	0.013	2.57
Tryptophan	0.092	±	0.045	3.18
Tyrosine	0.231	±	0.058	2.57
Valine	0.343	±	0.026	2.57

Information Mass Fraction Values for Elements: Each information mass fraction value is the mean result of a NIST analysis using a single method. No uncertainty is provided because there is insufficient information available for its assessment. Information values cannot be used to establish metrological traceability.

Table 8. Information Mass Fraction Values (Dry-Mass Basis) for Elements in SRM 3233

	Mass Fraction (mg/kg)
Aluminum[a]	40
Chlorine[a]	10 000
Iodine[b]	0.04
	Mass Fraction (µg/kg)
Arsenic[c]	80

[a] NIST INAA
[b] NIST ICP-MS
[c] NIST RNAA

Table 9. Information Mass Fraction Values (Dry-Mass Basis) for Dietary Fiber in SRM 3233[a,b]

	Mass Fraction (%)
Based on Data Obtained Using AOAC 2009.01	
HMW DF	9.59
Based on Data Obtained Using AOAC 991.43	
IDF	6.41
Based on Data Obtained Using AOAC 985.29	
IDF	6.61
HMW SDF	2.98

[a] DF = dietary fiber
IDF = insoluble dietary fiber
HMW = high molecular weight
SDF = soluble dietary fiber

[b] Data reported by one laboratory; insufficient information is available to assign an uncertainty to this value. Information values cannot be used to establish metrological traceability.

REFERENCES

[1] May, W.; Parris, R.; Beck II, C.; Fassett, J.; Greenberg, R.; Guenther, F.; Kramer, G.; Wise, S.; Gills, T.; Colbert, J.; Gettings, R.; MacDonald, B.; *Definition of Terms and Modes Used at NIST for Value-Assignment of Reference Materials for Chemical Measurements*; NIST Special Publication 260-136; U.S. Government Printing Office: Washington, DC (2000); available at http://www.nist.gov/srm/upload/SP260-136.PDF (accessed Sep 2014).

[2] JCGM 100:2008; *Evaluation of Measurement Data — Guide to the Expression of Uncertainty in Measurement* (GUM 1995 with Minor Corrections); Joint Committee for Guides in Metrology (JCGM) (2008); available at http://www.bipm.org/utils/common/documents/jcgm/JCGM_100_2008_E.pdf (accessed Sep 2014); see also Taylor, B.N.; Kuyatt, C.E.; *Guidelines for Evaluating and Expressing the Uncertainty of NIST Measurement Results*; NIST Technical Note 1297; U.S. Government Printing Office: Washington, DC (1994); available at http://www.nist.gov/pml/pubs/tn1297/index.cfm (accessed Sep 2014).

[3] JCGM 101:2008; *Evaluation of Measurement Data – Supplement 1 to the Guide to Expression of Uncertainty in Measurement, Propagation of Distributions Using a Monte Carlo Method*; JCGM (2008); available at http://www.bipm.org/utils/common/documents/jcgm/JCGM_101_2008_E.pdf (accessed Sep 2014).

[4] Efron, B.; Tibshirani, R.J.; *An Introduction to the Bootstrap*; Chapman & Hall, London, UK (1993).

[5] Thompson, A.; Taylor, B.N.; *Guide for the Use of the International System of Units (SI)*; NIST Special Publication 811; U.S. Government Printing Office: Washington, DC (2008); available at http://www.nist.gov/pml/pubs/sp811/index.cfm (accessed Sep 2014).

[6] Sharpless, K.E.; Duewer, D.L.; *Standard Reference Materials for Analysis of Dietary Supplements*; J. AOAC Int., Vol. 91, pp. 1298–1302 (2008).

[7] Paul, R.L.; *Determination of Arsenic in Food and Dietary Supplement Standard Reference Materials by Neutron Activation Analysis*, Anal. Chem., Vol. 83, pp. 152–156 (2011).

[8] AOAC International; *Official Methods of Analysis*, 18th ed.; http://www.eoma.aoac.org (accessed Sep 2014).

[9] Huber, P.J; *Robust Statistics*; John Wiley: New York (1981).

Certificate Revision History: 05 September 2014 (Removed reference value for solids; editorial changes); 12 February 2013 (Changed unit size; removed test portion size for fiber analysis; editorial changes); 28 September 2012 (Original certificate date).

Users of this SRM should ensure that the Certificate of Analysis in their possession is current. This can be accomplished by contacting the SRM Program: telephone (301) 975-2200; fax (301) 948-3730; e-mail srminfo@nist.gov; or via the Internet at http://www.nist.gov/srm.

ANEXO G: MATERIAL DE REFERENCIA LÁCTEOS

National Institute of Standards & Technology

Certificate of Analysis

Standard Reference Material® 1849a

Infant/Adult Nutritional Formula

This Standard Reference Material (SRM) is intended primarily for validation of methods for determining proximates, fatty acids, cholesterol, vitamins, elements, amino acids, and nucleotides in infant and adult nutritional formulas and similar materials. This SRM can also be used for quality assurance when assigning values to in-house reference materials. The SRM is a milk-based, hybrid infant/adult nutritional powder prepared by a manufacturer of infant formula and adult nutritional products. A unit of SRM 1849a consists of 10 packets, each containing approximately 10 g of material.

Certified Mass Fraction Values: Certified values for fatty acids, cholesterol, elements, vitamins, and carnitine in SRM 1849a are provided in Tables 1 through 3. A NIST certified value is a value for which NIST has the highest confidence in its accuracy in that all known or suspected sources of bias have been investigated or taken into account [1]. Analyses for value assignment were performed by NIST and collaborating laboratories. Certified values were calculated as the unweighted mean of the mean values from NIST methods, the median of the mean results provided by collaborating laboratories, and the mean provided by the manufacturer, where appropriate. The associated uncertainties are expressed at an approximately 95 % level of confidence [2–4]. Values are reported on an as-received (not dry-mass) basis in mass fraction units [5].

Reference Mass Fraction Values: Reference values are provided for additional fatty acids (Table 4); proximates, lactose monohydrate, and calories (Table 5); additional vitamins, *myo*-inositol, and chlorine (Table 6); amino acids and taurine (Table 7); and nucleotides (Table 8). A NIST reference value is a noncertified value that is the best estimate of the true value based on available data; however, the value does not meet the NIST criteria for certification [1] and is provided with associated uncertainties that may reflect only measurement reproducibility, may not include all sources of uncertainty, or may reflect a lack of sufficient statistical agreement among multiple analytical methods. The reference mass fraction values were derived from results reported by NIST, collaborating laboratories, or the manufacturer. Values are reported on an as-received (not dry-mass) basis in mass fraction units [5].

Information Mass Fraction Values: Information values for free choline ion and nucleotides plus nucleosides are provided in Table 9. A NIST information value is a value that may be of interest to the SRM user, but insufficient information is available to assess the uncertainty associated with the value, therefore no uncertainty is provided [1]. Information values cannot be used to establish metrological traceability.

Expiration of Certification: The certification of **SRM 1849a** is valid, within the measurement uncertainty specified, until **30 November 2021**, provided the SRM is handled and stored in accordance with the instructions given in this certificate (see "Instructions for Storage and Use"). The certification is nullified if the SRM is damaged, contaminated, or otherwise modified.

Maintenance of SRM Certification: NIST will monitor this SRM over the period of its certification. If substantive technical changes occur that affect the certification before the expiration of this certificate, NIST will notify the purchaser. Registration (see attached sheet or register online) will facilitate notification.

Coordination of the technical measurements leading to the certification of this SRM was performed by M.M. Phillips, K.E. Sharpless, and L.J. Wood of the NIST Chemical Sciences Division, S. Ehling of the Grocery Manufacturers Association (GMA, Washington, DC), and M.K. Mountford of the Infant Nutrition Council of America (Atlanta, GA).

Carlos A. Gonzalez, Chief
Chemical Sciences Division

Robert L. Watters, Jr., Director
Office of Reference Materials

Gaithersburg, MD 20899
Certificate Issue Date: 29 October 2015
Certificate Revision History on Last Page

Analytical measurements at NIST were performed by T.A. Butler, J. Camara, B.E. Lang, R. Oflaz, M.M. Phillips, B.J. Place, S.A. Rabb, C.A. Rimmer, L.T. Sniegoski, J.B. Thomas, M.J. Welch, and L.J. Wood of the NIST Chemical Sciences Division.

Collaborating Laboratories: Analysts at the following laboratories analyzed SRM 1849a for value assignment as part of a GMA Food Industry Analytical Chemists Committee (FIACC) interlaboratory comparison exercise: Abbott Nutrition, Columbus, OH, USA; Campbell Soup Company, Camden, NJ, USA; Conagra Foods, Omaha, NE, USA; Covance, Inc., Madison, WI, USA; Del Monte Foods, Walnut Creek, CA, USA; Eurofins Chemical Control, Cuneo, Italy; Eurofins Central Analytical Laboratories, Metairie, LA, USA; Eurofins Scientific, Des Moines, IA, USA; General Mills, Inc., Golden Valley, MN, USA; Hormel Foods Corporation, Austin, MN, USA; Land O'Lakes, Arden Hills, MN, USA; Nestlé USA, Dublin, OH, USA; Schwan Food Company, Salina, KS, USA; Silliker, Madison, WI, USA; Silliker Shanghai Ltd., Shanghai, China; Silliker Canada, Markham, ON, Canada; Silliker Ibérica, Barcelona, Spain; and The J.M. Smucker Co., Orville, OH, USA. As part of a separate interlaboratory comparison exercise organized through the International Formula Council, the following laboratories also provided results that were combined with data from the GMA FIACC laboratories: Fonterra, Waitoa, NZ and Nestlé, Nunspeet, The Netherlands. Analyses for value assignment were also performed by Hong Kong Government Laboratory.

Statistical analysis was provided by J.H. Yen of the NIST Statistical Engineering Division.

Support aspects involved in the issuance of this SRM were coordinated through the NIST Office of Reference Materials.

NOTICE AND WARNING TO USERS

SRM 1849a IS INTENDED FOR LABORATORY USE ONLY, NOT FOR HUMAN CONSUMPTION. THIS MATERIAL CONTAINS SOME NUTRIENTS AT LEVELS NOT PERMITTED IN INFANT FORMULA AND IS NOT AN INFANT FORMULA.

INSTRUCTIONS FOR STORAGE AND USE

Storage: The original unopened packets in SRM 1849a should be stored at –80 °C or lower. The certification only applies to the initial use and the same results are not guaranteed if the remaining powder is used at a later date.

Use: Before use, shake the unopened packet to ensure the contents are mixed thoroughly. For certified values to be valid, test portions of the following masses should be used: 0.5 g for fatty acid analysis, 0.5 g for cholesterol analysis, between 0.2 g and 2 g for elemental analysis, and between 1 g and 5 g for vitamin analysis. The stability of analytes in previously opened and stored packets has not been investigated. Results obtained in analyses should include their own estimates of uncertainty and can be compared to the certified values using procedures described in reference 6.

SOURCE, PREPARATION, AND ANALYSIS[1]

Source and Preparation: The SRM is a milk-based hybrid infant/adult nutritional powder, prepared by a manufacturer of infant formula and adult nutritional products. A base liquid containing all constituents was conventionally heat processed, homogenized, and spray-dried. The product was packaged into single-use nitrogen-flushed pouches, each containing 10 g of powder. The material was stored below 0 °C following packaging and is stored at NIST at –80 °C to enhance long-term stability.

Analytical Approach for Determination of Fatty Acids and Cholesterol: Value assignment of the mass fractions of fatty acids in SRM 1849a were based on the combination of measurements made at NIST using gas chromatography (GC) with flame ionization detection (FID) and by collaborating laboratories. Value assignment of the cholesterol mass fraction was based on measurements made by NIST using an isotope dilution (ID) GC method with mass spectrometric (MS) detection.

NIST Analyses for Fatty Acids Using GC-FID: Mass fractions of fatty acids were measured by GC-FID from single 0.5 g test portions from each of 7 packets of SRM 1849a. Samples were combined with wet Hydromatrix (Varian, Palo Alto, CA) and transferred to a glass extraction thimble. An internal standard solution containing tridecanoic acid triglyceride and octacosanoic acid methyl ester was added, and samples were extracted for 22 h using a hexane/acetone (4:1, volume fraction) solution. Following extraction, extracts were concentrated in toluene, and 1 mL of MethPrep II

[1] Certain commercial equipment, instruments or materials are identified in this certificate to adequately specify the experimental procedure. Such identification does not imply recommendation or endorsement by the National Institute of Standards and Technology, nor does it imply that the materials or equipment identified are necessarily the best available for the purpose.

(0.1 mol/L methanolic [*m*-trifluoromethylphenyl] trimethylammonium hydroxide, Alltech, Deerfield, IL) was added. Samples were mixed for 10 s to 15 s and allowed to sit for at least 1 h prior to analysis by GC-FID. Six independently prepared calibrants were used for quantitation. GC-FID was performed using a 0.25 mm × 100 m bis-cyanopropyl polysiloxane fused silica capillary column. Calibrants were prepared gravimetrically from SRM 2377 Fatty Acid Methyl Esters in Isooctane, at levels intended to approximate the levels of the fatty acids in the SRM following extraction. A single internal standard solution was used for the calibrants and samples. Calculations are based on linear regression of response factors for the calibrants.

NIST Analyses for Cholesterol Using ID-GC-MS: The mass fraction of cholesterol was measured using the ID-GC-MS method developed at NIST for serum cholesterol [7] and modified for the determination of cholesterol in food matrices using AOAC International Official Method 996.06 for hydrolysis [8]. Three sets of samples were prepared. Each set consisted of duplicate 0.5 g test portions from each of five packets of SRM 1849a weighed into round-bottom flasks. An aliquot of a solution containing a known mass of the internal standard, cholesterol-$^{13}C_3$, was added to each flask. Hydrolysis of cholesterol esters was accomplished by refluxing the samples in an alcohol-KOH solution for 1 h. Hexane was then used to extract the cholesterol. A portion of the hexane extract was evaporated to dryness and N,O-bis(trimethylsilyl)acetamide was added to convert cholesterol to its trimethylsilyl (TMS) derivative (cholesterol-TMS). Analyses were performed on a GC-MS system operated in the electron ionization mode with selected ion monitoring at *m/z* 458 and *m/z* 461 for the unlabeled and labeled cholesterol-TMS, respectively. The GC was equipped with a 30 m (5:95 phenyl/methyl polysiloxane [mole fraction]) non-polar fused silica column directly interfaced to the ion source. Standards consisting of mixtures of known quantities of pure unlabeled cholesterol (SRM 911c) and cholesterol-$^{13}C_3$ were run before and after the samples to generate composite linear regressions for calculation of the quantity of cholesterol in the samples.

Analytical Approach for Determination of Vitamins: Value assignment of the mass fractions of vitamins in SRM 1849a were based on the combination of results provided from various analytical methods at NIST, collaborating laboratories, and the manufacturer, where available. NIST provided measurements by using ID with liquid chromatography (LC) and MS or tandem MS (MS/MS), LC with absorbance detection, and LC with fluorescence detection.

NIST Analyses for Retinyl Palmitate, Cholecalciferol, and Phylloquinone Using ID-LC-MS: Mass fractions of vitamin A (as retinyl palmitate), vitamin D_3 (cholecalciferol), and vitamin K_1 (phylloquinone) were measured by ID-LC-MS from duplicate 3 g to 5 g test portions of SRM 1849a from each of 10 packets. Samples were accurately weighed into 50 mL polyethylene centrifuge tubes and separate aliquots from each of four internal standard solutions containing retinyl palmitate-d_4, and vitamin D_3-d_3, and vitamin K_1-d_6 were added. Analytes were extracted into ethyl acetate by sonication and then mixing/rotation overnight. Five additional extractions were performed using sonication and 30 min of mixing/rotation. The supernatants for the individual test portions were combined and were evaporated to approximately 10 mL under nitrogen. They were injected without additional processing. Separations were performed on a C18 column with an isocratic mobile phase of methanol/acetonitrile (60:40, volume fraction) containing 5 mmol/L ammonium acetate. The separation was monitored using an absorbance detector at 325 nm, but MS was used for quantitation. Retinyl palmitate and retinyl palmitate-d_4 were monitored at *m/z* 269 and *m/z* 273, respectively. Vitamins D_3 and D_3-d_3 were monitored at *m/z* 385 and *m/z* 388, respectively. Vitamins K_1 and K_1-d_6 were monitored at *m/z* 452 and *m/z* 458, respectively. Calibrants were prepared gravimetrically, with concentrations assigned spectrophotometrically, at levels intended to approximate the levels of the fat-soluble vitamins in the SRM following extraction. A single internal standard solution was used for the calibrants and samples.

NIST Analyses for Total α-Tocopherol and α-Tocopheryl Acetate Using LC-Absorbance and/or LC-Fluorescence: Mass fractions of vitamin E (as total α-tocopherol and α-tocopheryl acetate) were measured by LC-absorbance and/or LC-fluorescence from duplicate 1 g to 2 g test portions of SRM 1849a from each of 10 packets. Samples were accurately weighed into 50 mL polyethylene centrifuge tubes. An aliquot of an ethanolic tocol internal standard solution was added. The sample was suspended in approximately 5 mL of water and an aliquot of dipotassium oxalate solution was added. The analytes were then extracted from the suspended sample into a mixture of ethanol/*tert*-butylmethylether/petroleum ether (10:5:7, volume fractions) by rotational agitation for 15 min. Five additional extractions were performed using 15 min of mixing/rotation. The supernatants for the individual extractions were combined, washed with water twice, and were evaporated to dryness under nitrogen. The residues were resuspended in approximately 2 mL of ethanol/ethyl acetate (50:50, volume fraction). Separations were performed on a C18 column with an isocratic mobile phase of methanol/water (90:10, volume fraction). The separation was monitored using an absorbance detector at 295 nm for α-tocopherol acetate and a fluorescence detector at an excitation wavelength of 295 nm and an emission wavelength of 330 nm for α-tocopherol. Calibrants were prepared gravimetrically, with concentrations assigned spectrophotometrically, at levels intended to approximate the levels of the fat-soluble vitamins in the SRM following extraction. A single internal standard solution was used for the calibrants and samples.

NIST Analyses for Ascorbic Acid Using LC-Absorbance: The mass fraction of vitamin C (ascorbic acid) was measured by LC absorbance in duplicate 2 g test portions from each of 10 packets of SRM 1849a. Samples were dissolved in 30 g to 35 g of HPLC-grade water and an internal standard, 4-pyridoxic acid, was added. Metaphosphoric acid was added to stabilize the vitamin C in the mixture. Dithiothreitol was added to the mixture to convert dihydroascorbic acid to total ascorbic acid. The mixture was sonicated for 30 min and centrifuged at room temperature for 15 min. A 1 mL aliquot of the test mixture was removed and filtered using a 0.45 µm nylon filter prior to analysis. Separations were performed on a C18 column using a gradient LC method with potassium phosphate (dibasic)/acetonitrile mobile phase. The separation was monitored using an absorbance detector at 243 nm. Calibrants were prepared gravimetrically, at levels intended to approximate the level of ascorbic acid in the SRM following extraction. A single internal standard solution was used for the calibrants and samples.

NIST Analyses for Thiamine, Riboflavin, Niacinamide, Pantothenic Acid, and Pyridoxine Using ID-LC-MS: Mass fractions of vitamin B_1 (thiamine), vitamin B_3 (niacinamide), vitamin B_5 (pantothenic acid), and vitamin B_6 (pyridoxine) were measured by ID-LC-MS, and vitamin B_2 (riboflavin) were measured by LC-MS in duplicate 2 g test portions taken from each of 10 packets of SRM 1849a. Four internal standards were added: $^{13}C_3$-thiamine chloride; $^{2}H_4$-niacinamide; calcium $^{13}C_3$,^{15}N-pantothenate; and $^{13}C_4$-pyridoxine hydrochloride. The analytes and internal standards were extracted into dilute acetic acid for analysis by positive-ion mode LC-MS. A gradient method with an ammonium formate buffer/methanol mobile phase and a C18 column were used for LC-MS determination. Thiamine and $^{13}C_3$-thiamine were measured at *m/z* 265 and *m/z* 268, respectively. Niacinamide and $^{2}H_4$-niacinamide were measured at *m/z* 123 and *m/z* 127, respectively. Pantothenic acid and $^{13}C_3$,^{15}N-pantothenic acid were measured at *m/z* 220 and *m/z* 224, respectively. Pyridoxine and $^{13}C_4$-pyridoxine were measured at *m/z* 170 and *m/z* 174, respectively. Riboflavin was measured at *m/z* 377, with $^{13}C_4$-pyridoxine as the internal standard. Calibrants were prepared gravimetrically, at levels intended to approximate the levels of the water-soluble vitamins in the SRM following extraction. A single internal standard solution was used for the calibrants and samples.

NIST Analyses for Folic Acid and 5-Methyltetrahydrofolate Using ID-LC-MS/MS: Mass fractions of folic acid and 5-methyltetrahydrofolate were measured by ID-LC-MS/MS on two 1.0 g test portions taken from each of 10 packets of SRM 1849a. Internal standards $^{13}C_5$-folic acid and $^{13}C_5$-5-methyltetrahydrofolate were added. A sodium phosphate buffer containing ascorbic acid was added and samples were subjected to trienzyme digestion with protease, α-amylase, and deconjugase [9]. Supernatants from centrifuged samples were filtered through 0.45 µm polyvinylidene difluoride (PVDF) filters and analyzed for 5-methyltetrahydrofolate by positive mode LC-MS/MS. Folic acid and $^{13}C_5$-folic acid were extracted on solid-phase extraction cartridges and eluted with a water/methanol solution containing ascorbic acid and formic acid for positive mode LC-MS/MS analysis. A gradient LC method with a water/acetonitrile/formic acid mobile phase and a C18 column were used for the determination of both folic acid and 5-methyltetrahydrofolate. The transitions *m/z* 442.4 → *m/z* 295.1 and *m/z* 447.4 → *m/z* 295.1 were monitored for folic acid and $^{13}C_5$-folic acid, respectively. The transitions *m/z* 460.5 → *m/z* 176.1 and *m/z* 465.5 → *m/z* 176.1 were monitored for 5-methyltetrahydrofolate and $^{13}C_5$-5-methyltetrahydrofolate, respectively. Calibrants were prepared gravimetrically, with concentration assigned spectrophotometrically, at levels intended to approximate the levels of the folates in the SRM following extraction. A single internal standard solution was used for the calibrants and samples.

NIST Analyses for Biotin Using ID-LC-MS: The mass fraction of biotin was measured by ID-LC-MS in two 1.0 g test portions taken from each of 10 packets of SRM 1849a with $^{2}H_2$-biotin added as an internal standard. An aqueous formic acid solution was added to the samples, which were then subjected to mechanical shaking. Samples were centrifuged, and biotin and $^{2}H_2$-biotin were extracted on solid-phase extraction cartridges and eluted with a water/methanol solution containing formic acid for positive mode LC-MS analysis. An isocratic LC method with a water/methanol/formic acid mobile phase and a C18 column were used for the determination of biotin. Biotin and $^{2}H_2$-biotin were monitored at *m/z* 245 and *m/z* 247, respectively. Calibrants were prepared gravimetrically, at levels intended to approximate the levels of biotin in the SRM following extraction. A single internal standard solution was used for the calibrants and samples.

NIST Analyses for Total Choline and Free Carnitine Using ID-LC-MS: Mass fractions of choline and carnitine were measured by ID-LC-MS in two 1.0 g test portions taken from each of 10 packets of SRM 1849a with $^{2}H_9$-choline chloride and $^{2}H_9$-carnitine hydrochloride added as internal standards. The analytes and internal standards were extracted and hydrolyzed by microwave digestion into dilute hydrochloric acid for analysis by positive-ion mode LC-MS. A gradient method with an ammonium formate/acetonitrile mobile phase and a mixed-mode C18 column were used for LC-MS determination. Choline and $^{2}H_9$-choline were measured at *m/z* 104 and *m/z* 113, respectively. Carnitine and $^{2}H_9$-carnitine were measured at *m/z* 162 and *m/z* 171, respectively. Calibrants were prepared gravimetrically, at levels intended to approximate the levels of choline and carnitine in the SRM following extraction. A single internal standard solution was used for the calibrants and samples.

Analytical Approach for Determination of Elements: Value assignment of the mass fractions of elements in SRM 1849a was based on the combination of measurements made at NIST, collaborating laboratories, and the manufacturer, where available. NIST provided measurements by using inductively coupled plasma optical emission spectrometry (ICP-OES), inductively coupled plasma mass spectrometry (ICP-MS), and instrumental neutron activation analysis (INAA).

NIST Analyses for Ca, Cr, Cu, Fe, Mg, Mn, Mo Na, P, K, Se, and Zn Using ICP-OES and/or ICP-MS: Mass fractions of calcium, chromium, copper, iron, magnesium, manganese, molybdenum, phosphorus, potassium, sodium, and zinc were measured by ICP-OES in duplicate 1.0 g test portions taken from each of 10 packets of SRM 1849a. Mass fractions of chromium, molybdenum, and selenium were measured by ICP-MS using duplicate 0.5 g test portions taken from each of 10 packets of SRM 1849a. Samples were digested using nitric acid or a nitric acid/hydrofluoric acid mixture in a microwave oven. Quantitation was based on the method of standard additions.

NIST Analyses for I Using ICP-MS: The mass fraction of iodine was measured by ICP-MS in duplicate 0.5 g test portions taken from each of six packets of SRM 1849a. Samples were digested using nitric acid in a microwave oven. After digestion, the pH was raised in the sample solutions by the addition of ammonium hydroxide. Quantitation was based on the method of standard additions.

NIST Analyses for Cl, I and Mn Using INAA: Mass fractions of chlorine, iodine, and manganese were determined by INAA, in individual disks prepared from single 0.2 g test portions taken from each of 10 packets of SRM 1849a. Samples, standards, and controls were packaged individually in clean polyethylene bags and irradiated individually at 20 MW for 60 s. Nuclides were counted for 5 min after a 5 min decay, for 10 min following a 10 min decay, and for 20 min after a few hours decay.

Collaborating Laboratories' Analyses: The GMA FIACC collaborating laboratories and several other laboratories were asked to use their usual methods to make measurements on single test portions taken from each of two packets of SRM 1849a. The manufacturer of the material also provided data for several nutrients.

Homogeneity Assessment: The homogeneity of elements, fatty acids, cholesterol, and vitamins was assessed at NIST using the methods and test portion sizes described in this certificate (see "Instructions for Storage and Use"); analysis of variance at a 5 % significance level did not show statistically significant heterogeneity. All analytes have been treated as though they are homogeneously distributed in the material although the homogeneity of the other analytes was not assessed.

Value Assignment: The GMA FIACC collaborating laboratories reported the individual results for each of their analyses for a given analyte and the mean of each laboratory's results was determined. For calculation of assigned values, the median of the individual GMA FIACC collaborating laboratory means, the manufacturer's mean, Hong Kong Government Laboratory's mean, and the mean of the individual sets of NIST data were averaged, as appropriate based on available data.

Certified Mass Fraction Values for Fatty Acids as Free Fatty Acids: Each certified mass fraction value is the combined mean from the mean of NIST data, the mean of the material manufacturer's data, and the median of the mean results provided by collaborating laboratories, where available. The uncertainty provided with each value is an expanded uncertainty about the mean to cover the measurand with approximately 95 % confidence. The expanded uncertainty is calculated as $U = ku_c$, where u_c incorporates the observed difference between the results from the methods and their respective uncertainties, consistent with the ISO/JCGM Guide and with its Supplement 1, and k is a coverage factor corresponding to approximately 95 % confidence [2–4]. The measurands are the mass fractions of selected fatty acids in nutritional formula as listed in Table 1. Metrological traceability is to the SI derived unit for mass fraction (expressed as grams per 100 grams).

Certified Mass Fraction Value for Cholesterol: The certified mass fraction for cholesterol is the mean of results obtained by NIST using ID-GC/MS. The uncertainty provided with the value is an expanded uncertainty about the mean to cover the measurand with approximately 95 % confidence. The expanded uncertainty is calculated as $U = ku_c$, where u_c represents the combined uncertainty, consistent with the ISO/JCGM Guide [2], and k is a coverage factor corresponding to approximately 95 % confidence [2]. The uncertainty for cholesterol incorporates Type B uncertainties for purity of the reference compound, completeness of hydrolysis, stability of cholesterol in base, and the difference between the certification set of data and a confirming set of data using a different GC column and different ions. The measurand is the mass fraction of cholesterol in nutritional formula as listed in Table 1. Metrological traceability is to the SI derived unit for mass fraction (expressed as milligrams per gram).

Table 1. Certified Mass Fraction Values for Fatty Acids (as Free Fatty Acids) and Cholesterol in SRM 1849a

		Mass Fraction (g/100 g)	Coverage Factor, k
Octanoic Acid (C8:0)[a,b,c]	Caprylic Acid	0.74 ± 0.14	2.00
Hexadecanoic Acid (C16:0)[a,b]	Palmitic Acid	2.10 ± 0.15	2.00
(Z)-9-Hexadecenoic Acid (C16:1 n-7)[a,b]	Palmitoleic Acid	0.0222 ± 0.0042	2.00
Octadecanoic Acid (C18:0)[a,b]	Stearic Acid	0.809 ± 0.046	2.00
(Z)-9-Octadecenoic Acid (C18:1 n-9)[a,b]	Oleic Acid	10.7 ± 1.1	2.00
(Z)-11-Octadecenoic Acid (C18:1 n-7)[a,b]	Vaccenic Acid	0.196 ± 0.023	2.00
(Z,Z)-9,12-Octadecadienoic Acid (C18:2 n-6)[a,b,c]	Linoleic Acid	5.72 ± 0.58	2.00
(Z,Z,Z)-9,12,15-Octadecatrienoic Acid (C18:3 n-3)[a,b,c]	α-Linolenic Acid	0.591 ± 0.081	2.00
Eicosanoic Acid (C20:0)[a,b]	Arachidic Acid	0.0822 ± 0.0061	2.00
(Z,Z,Z,Z)-5,8,11,14-Eicosatetraenoic Acid (C20:4 n-6)[a,c]	Arachidonic Acid	0.123 ± 0.011	2.00
Docosanoic Acid (C22:0)[a,b]	Behenic Acid	0.0660 ± 0.0057	2.00
(Z,Z,Z,Z,Z,Z)-4,7,10,13,16,19-Docosahexaenoic Acid (C22:6 n-3)[a,c]	DHA	0.0179 ± 0.0024	2.00
Tetracosanoic Acid (C24:0)[a,b]	Lignoceric Acid	0.0387 ± 0.0079	2.00
(Z)-15-Tetracosenoic Acid (C24:1 n-9)[a,b]	Nervonic Acid	0.0202 ± 0.0022	2.00
Fat (as the sum of fatty acids as triglycerides)[a,b]		27.9 ± 2.2	2.00
Saturated Fatty Acids[a,b]		9.42 ± 0.63	2.00
Cis-Monounsaturated Fatty Acids[a,b]		11.1 ± 1.2	2.00
Cis-Polyunsaturated Fatty Acids[a,b]		6.07 ± 0.50	2.00
Omega-3 Fatty Acids[a,b]		0.568 ± 0.027	2.00
Omega-6 Fatty Acids[a,b]		5.55 ± 0.33	2.00
		Mass Fraction (mg/g)	
Cholesterol[d]		0.1374 ± 0.0029	2.00

[a] NIST GC-FID
[b] Collaborating laboratories
[c] Manufacturer
[d] NIST ID-GC-MS

Certified Mass Fraction Values for Elements: Each certified mass fraction value is the combined mean from the mean of NIST data, the mean of the material manufacturer's data, and the median of the mean results provided by collaborating laboratories, where available. The uncertainty provided with each value is an expanded uncertainty about the mean to cover the measurand with approximately 95 % confidence. The expanded uncertainty is calculated as $U = ku_c$, where u_c incorporates the observed difference between the results from the methods and their respective uncertainties, consistent with the ISO/JCGM Guide and with its Supplement 1, and k is a coverage factor corresponding to approximately 95 % confidence [2–4]. The measurands are the mass fractions of the elements in nutritional formula listed in Table 2. Metrological traceability is to the SI derived unit for mass fraction (expressed as milligrams per kilogram).

Table 2. Certified Mass Fraction Values for Elements in SRM 1849a

	Mass Fraction (mg/kg)			Coverage Factor, k
Calcium (Ca)[a,b,c]	5253	±	51	2.00
Copper (Cu)[a,b,c]	19.78	±	0.26	2.00
Chromium (Cr)[a,b,c,d]	1.072	±	0.032	2.00
Iodine (I)[b,d,e]	1.29	±	0.11	2.00
Iron (Fe)[a,b,c]	175.6	±	2.9	2.00
Magnesium (Mg)[a,b,c]	1648	±	36	2.00
Manganese (Mn)[a,b,c]	49.59	±	0.97	2.00
Molybdenum (Mo)[a,b,c,d]	1.707	±	0.040	2.00
Phosphorus (P)[a,b,c]	3990	±	140	2.00
Potassium (K)[a,b,c]	9220	±	110	2.00
Selenium (Se)[b,c,d]	0.812	±	0.029	2.00
Sodium (Na)[a,b,c]	4265	±	83	2.00
Zinc (Zn)[a,b,c]	151.0	±	5.6	2.00

[a] NIST ICP-OES
[b] Collaborating laboratories
[c] Manufacturer
[d] NIST ICP-MS
[e] NIST INAA

Certified Mass Fraction Values for Vitamins and Carnitine: Each certified mass fraction value is the combined mean from the mean of NIST data, the mean of the material manufacturer's data, and the median of the mean results provided by collaborating laboratories, where available. The uncertainty provided with each value is an expanded uncertainty about the mean to cover the measurand with approximately 95 % confidence. The expanded uncertainty is calculated as $U = ku_c$, where u_c incorporates the observed difference between the results from the methods and their respective uncertainties, consistent with the ISO/JCGM Guide and with its Supplement 1, and k is a coverage factor corresponding to approximately 95 % confidence [2–4]. The measurands are the mass fractions of vitamins and carnitine in nutritional formula as listed in Table 3. Metrological traceability is to the SI derived unit for mass fraction (expressed as milligrams per kilogram).

Table 3. Certified Mass Fraction Values for Vitamins and Carnitine in SRM 1849a

	Mass Fraction (mg/kg)			Coverage Factor, k
Ascorbic Acid (Vitamin C)[a,b,c]	784	±	65	2.00
Thiamine (Vitamin B_1)[c,d,e]	12.57	±	0.98	2.00
Riboflavin (Vitamin B_2)[c,f]	20.37	±	0.52	2.00
Niacinamide (Vitamin B_3)[c,d]	108	±	10	2.00
Pantothenic Acid (Vitamin B_5)[c,d]	68.2	±	1.9	2.00
Pyridoxine (Vitamin B_6)[c,d,g]	13.46	±	0.93	2.00
Folic Acid[b,c,h,i]	2.293	±	0.062	2.00
Biotin[b,c,d]	1.99	±	0.13	2.00
Choline Ion[b,c,d,j]	1090	±	110	2.00
Carnitine[b,c,d]	136	±	14	2.00
Retinol (Vitamin A)[b,c,d,i,k]	7.68	±	0.23	2.00
Retinyl Palmitate (Vitamin A)[c,d,i]	14.30	±	0.20	2.00
Cholecalciferol (Vitamin D_3)[b,c,d,i]	0.111	±	0.017	2.00
α-Tocopheryl Acetate (Vitamin E)[a,b,c,i]	158	±	18	2.00
Total α-Tocopherol (Vitamin E)[b,i,l,m]	219	±	16	2.00
Phylloquinone (Vitamin K_1)[b,c,d,i]	1.06	±	0.17	2.00

[a] NIST LC-absorbance
[b] Collaborating laboratories
[c] Manufacturer
[d] NIST ID-LC-MS
[e] Vitamin B_1 is reported as thiamine ion (265.36 g/mol), not thiamine chloride or thiamine chloride hydrochloride.
[f] NIST LC-MS
[g] Vitamin B_6 is reported as pyridoxine (169.18 g/mol), not pyridoxine hydrochloride.
[h] NIST ID-LC-MS/MS
[i] Metrological traceability is established through the molar absorptivity of the compound.
[j] Total choline, reported as the ion.
[k] Retinol was added to SRM 1849a as retinyl palmitate. NIST measured retinyl palmitate and converted the mass fraction to retinol equivalents by multiplying by the ratio of the relative molecular masses of retinol and retinyl palmitate. The certified value is expressed as retinol equivalents, and represents total (*cis* + *trans*) retinol. No correction is made for differences in biological activity of the *cis* and *trans* forms.
[l] NIST LC-fluorescence
[m] α-Tocopherol was added to SRM 1849a as RRR-α-tocopheryl acetate. This certified value is expressed as α-tocopherol equivalents and includes "naturally occurring" α-tocopherol as well as the α-tocopheryl acetate that was added.

Reference Mass Fraction Values for Fatty Acids as Free Fatty Acids: Each reference mass fraction value is the combined mean from the mean of NIST GC-FID data and the median of the mean results provided by collaborating laboratories, where available. The uncertainty provided with each value is an expanded uncertainty about the mean to cover the measurand with approximately 95 % confidence. The expanded uncertainty is calculated as $U = ku_c$, where u_c incorporates the observed difference between the results from the methods and their respective uncertainties, consistent with the ISO/JCGM Guide and Supplement, and k is a coverage factor corresponding to approximately 95 % confidence [2–4]. The measurands are the mass fractions of fatty acids in nutritional formula as determined by the methods indicated as listed in Table 4. Metrological traceability is to the SI derived unit for mass fraction (expressed as grams per 100 grams).

Table 4. Reference Mass Fraction Values for Fatty Acids as Free Fatty Acids in SRM 1849a

		Mass Fraction (g/100 g)	Coverage Factor, k
Hexanoic Acid (C6:0)[a]	Caproic Acid	0.0625 ± 0.0099	2.13
Decanoic Acid (C10:0)[a,b]	Capric Acid	0.57 ± 0.14	2.00
Dodecanoic Acid (C12:0)[b]	Lauric Acid	3.99 ± 0.28	2.45
Tetradecanoic Acid (C14:0)[b]	Myristic Acid	1.476 ± 0.075	2.45
Heptadecanoic Acid (C17:0)[a]	Margaric Acid	0.0140 ± 0.0021	2.14
Total Trans C18:1 Fatty Acids[a]		0.0242 ± 0.0050	2.20
(Z,E)-9,12-Octadecadienoic Acid (C18:2)[a]		0.0205 ± 0.0032	2.57
(E,Z)-9,12-Octadecadienoic Acid (C18:2)[a]		0.0186 ± 0.0029	2.57
(Z,Z,Z)-6,9,12-Octadecatrienoic Acid (C18:3 n-6)[a]		0.0300 ± 0.0020	2.57
(Z)-11-Eicosenoic Acid (C20:1 n-9)[a,b]	Gondoic Acid	0.069 ± 0.017	2.00
Total Trans Fatty Acids[a]		0.085 ± 0.022	2.14

[a] Collaborating laboratories
[b] NIST GC-FID

Reference Values for Proximates, Lactose Monohydrate, and Calories: Each reference mass fraction value is the combined mean from the mean of the results provided by the material manufacturer and the median of the mean results provided by collaborating laboratories, where available. The uncertainty provided with the value is an expanded uncertainty about the mean to cover the measurand with approximately 95 % confidence. The expanded uncertainty is calculated as $U = ku_c$, where u_c represents the combined uncertainty, consistent with the ISO/JCGM Guide and k is a coverage factor corresponding to approximately 95 % confidence [2–4]. For values based on more than one data source, the combined uncertainty incorporates the observed difference between the results from the methods and their respective uncertainties. The measurands are the mass fractions of proximates and lactose monohydrate in nutritional formula as determined by the methods indicated as listed in Table 5. Metrological traceability is to the SI derived unit for mass fraction (expressed as grams per 100 grams). The measurand is the caloric content in nutritional formula as determined by the method indicated as listed in Table 5. Metrological traceability is to the SI derived unit for energy (expressed as kilocalories per 100 grams).

Table 5. Reference Values for Proximates, Lactose Monohydrate, and Calories in SRM 1849a

	Mass Fraction (g/100 g)	Coverage Factor, k
Solids[a]	98.28 ± 0.15	2.09
Ash[a,b]	4.695 ± 0.020	2.00
Fat (extracted)[a,b]	30.43 ± 0.95	2.00
Protein[a,b,c]	13.225 ± 0.056	2.00
Carbohydrates[a]	51.6 ± 1.3	2.11
Lactose Monohydrate[a]	47.6 ± 5.5	2.45
	Energy (kcal per 100 g)	**Coverage Factor, k**
Calories[d]	520.8 ± 6.4	2.13

[a] Collaborating laboratories
[b] Manufacturer
[c] Results for nitrogen were converted to protein using a factor of 6.38.
[d] The reference value for calories is the median of lab mean caloric calculations from the interlaboratory comparison exercise. If the mean proximate values above are used for calculation, with caloric equivalents of 9, 4, and 4 for fat (as the sum of fatty acids), protein, and carbohydrate, respectively, the mean caloric content is 521.2 kcal/100 g.

Reference Mass Fraction Values for Vitamins, *myo*-Inositol, and Chlorine: Each reference mass fraction value is the combined mean from the mean of NIST data, the mean of the material manufacturer's data, the mean of the results from Hong Kong Government Laboratory, or the median of the mean results provided by collaborating laboratories, where available. The expanded uncertainty is calculated as $U = ku_c$, where u_c represents the combined uncertainty, consistent with the ISO/JCGM Guide [2–4], and k is a coverage factor corresponding to approximately 95 % confidence. For values based on more than one data source, the combined uncertainty incorporates the observed difference between the results from the methods and their respective uncertainties. The measurands are the mass fractions of vitamins, myo-inositol, and chlorine in nutritional formula determined by the methods indicated, as listed in Table 6. Metrological traceability is to the SI derived unit for mass fraction (expressed as milligrams per kilogram).

Table 6. Reference Mass Fraction Values for Vitamins, *myo*-Inositol, and Chlorine in SRM 1849a

	Mass Fraction (mg/kg)	Coverage Factor, k
5-Methyltetrahydrofolate[a,b]	0.0839 ± 0.0031	2.12
Vitamin B_{12}[c,d]	0.0482 ± 0.0085	2.00
Free α-Tocopherol[b,e]	89.2 ± 1.9	2.09
myo-Inositol[d,f]	405.2 ± 7.6	2.00
Chlorine (Cl)[f,g]	7010 ± 170	2.00

[a] NIST ID-LC-MS/MS
[b] Metrological traceability is established through the molar absorptivity of the compound
[c] Collaborating laboratories
[d] Manufacturer
[e] NIST LC-fluorescence
[f] Hong Kong Government Laboratory
[g] NIST INAA

Reference Mass Fraction Values for Amino Acids and Taurine: Each reference mass fraction value is the combined mean from the mean of the material manufacturer's data and the median of the mean results provided by collaborating laboratories, where available. The uncertainty provided with the value is an expanded uncertainty about the mean to cover the measurand with approximately 95 % confidence. The expanded uncertainty is calculated as $U = ku_c$, where u_c represents the combined uncertainty, consistent with the ISO/JCGM Guide, and k is a coverage factor corresponding to approximately 95 % confidence [2–4]. The measurands are the mass fractions of amino acids and taurine in nutritional formula as determined by the methods indicated as listed in Table 7. Metrological traceability is to the SI derived unit for mass fraction (expressed as grams per 100 grams).

Table 7. Reference Mass Fraction Values for Amino Acids and Taurine in SRM 1849a

	Mass Fraction (g/100 g)	Coverage Factor, k
Alanine[a]	0.455 ± 0.021	2.31
Arginine[a]	0.400 ± 0.029	2.31
Aspartic Acid[a]	1.070 ± 0.057	2.31
Cystine[a,b]	0.1286 ± 0.0071	2.00
Glutamic Acid[a]	2.59 ± 0.27	2.31
Glycine[a]	0.241 ± 0.019	2.31
Histidine[a]	0.315 ± 0.036	2.31
Isoleucine[a]	0.660 ± 0.071	2.31
Leucine[a]	1.261 ± 0.050	2.31
Lysine[a]	1.010 ± 0.071	2.31
Phenylalanine[a]	0.580 ± 0.021	2.31
Proline[a]	1.195 ± 0.086	2.31
Serine[a]	0.720 ± 0.030	2.31
Taurine[a,b]	0.0366 ± 0.0018	2.00
Threonine[a]	0.640 ± 0.022	2.31
Tryptophan[a]	0.184 ± 0.010	2.45
Tyrosine[a]	0.510 ± 0.043	2.31
Valine[a]	0.76 ± 0.11	2.31

[a] Collaborating laboratories
[b] Manufacturer

Reference Mass Fraction Values for Nucleotides: Each reference mass fraction value is the median of the mean results provided by collaborating laboratories. The uncertainty provided with the value is an expanded uncertainty about the mean to cover the measurand with approximately 95 % confidence. The expanded uncertainty is calculated as $U = ku_c$, where u_c represents the combined uncertainty, consistent with the ISO/JCGM Guide [2], and k is a coverage factor corresponding to approximately 95 % confidence. The measurands are the mass fractions of nucleotides in nutritional formula as determined by the method used by the collaborating laboratories. Metrological traceability is to the SI derived unit for mass fraction (expressed as milligrams per kilogram).

Table 8. Reference Mass Fraction Values for Nucleotides in SRM 1849a

	Mass Fraction (mg/kg)	Coverage Factor, k
Adenosine Monophosphate	105.1 ± 5.3	2.57
Cytidine Monophosphate	268 ± 29	2.57
Guanosine Monophosphate	146 ± 11	2.57
Uridine Monophosphate	129 ± 15	2.57

Information Mass Fraction Values for Other Measurands: Each information mass fraction value is the mean of approximately 30 measurements provided by the manufacturer.

Table 9. Information Mass Fraction Values for Other Measurands in SRM 1849a

	Mass Fraction (mg/kg)
Free Choline Ion	798
Adenosine Monophosphate + Adenosine[(a)]	108
Cytidine Monophosphate + Cytidine[(a)]	317
Guanosine Monophosphate + Guanosine[(a)]	146
Uridine Monophosphate + Uridine[(a)]	155

[(a)] The mass fraction value represents the sum of the nucleotide and the nucleoside calculated as the nucleotide.

REFERENCES

[1] May, W.; Parris, R.; Beck II, C.; Fassett, J.; Greenberg, R.; Guenther, F.; Kramer, G.; Wise, S.; Gills, T.; Colbert, J.; Gettings, R.; MacDonald, B.; *Definition of Terms and Modes Used at NIST for Value-Assignment of Reference Materials for Chemical Measurements*; NIST Special Publication 260-136 (2000); available at http://www.nist.gov/srm/upload/SP260-136.PDF (accessed Oct 2015).

[2] JCGM 100:2008; *Evaluation of Measurement Data — Guide to the Expression of Uncertainty in Measurement* (GUM 1995 with Minor Corrections); Joint Committee for Guides in Metrology (2008); available at http://www.bipm.org/utils/common/documents/jcgm/JCGM_100_2008_E.pdf (accessed Oct 2015); see also Taylor, B.N.; Kuyatt, C.E.; *Guidelines for Evaluating and Expressing the Uncertainty of NIST Measurement Results*; NIST Technical Note 1297; U.S. Government Printing Office: Washington, DC (1994); available at http://www.nist.gov/pml/pubs/tn1297/index.cfm (accessed Oct 2015).

[3] JCGM 101:2008; *Evaluation of Measurement Data – Supplement 1 to the Guide to Expression of Uncertainty in Measurement-Propagation of Distributions Using a Monte Carlo Method*; Joint Committee for Guides in Metrology; International Bureau of Weights and Measures (BIPM), Sèvres, France (2008); available at http://www.bipm.org/utils/common/documents/jcgm/JCGM_101_2008_E.pdf (accessed Oct 2015).

[4] Efron, B.; Tibshirani, R.J.; *An Introduction to the Bootstrap*; Chapman & Hall, London, UK (1993).

[5] Thompson, A.; Taylor, B.N.; *Guide for the Use of the International System of Units (SI)*; NIST Special Publication 811; U.S. Government Printing Office: Washington, DC (2008); available at http://www.nist.gov/pml/pubs/sp811/index.cfm (accessed Oct 2015).

[6] Sharpless, K.E.; Duewer, D.L.; *Standard Reference Materials for Analysis of Dietary Supplements*; J. AOAC Int., Vol. 91, pp. 1298–1302 (2008).

[7] Ellerbe, P.; Meiselman, S.; Sniegoski, L.T.; Welch, M.J.; White V, E.; *Determination of Serum Cholesterol by a Modification of the Isotope Dilution Mass Spectrometric Definitive Method*; Anal. Chem., Vol. 614, pp. 1718–1723 (1989).

[8] AOAC International Official Method 996.06; *Official Methods of Analysis*; 18th edition, AOAC International, Gaithersburg, MD (2000).

[9] Hyun, T.H.; Tamura, T.; *Trienzyme Extraction in Combination with Microbiologic Assay in Food Folate Analysis: An Updated Review*; Exp. Biol. Med., Vol. 230, pp. 444–454 (2005).

Certificate Revision History: 29 October 2015 (Expiration date changed; Fatty acid values updated to certified values using collaborating laboratories data and NIST data and moved from Table 4 to Table 1; values for summed fatty acids updated from reference to certified values based on inclusion of NIST data and moved from Table 5 to Table 1; editorial changes); **15 June 2015** (Corrects footnote for Riboflavin in Table 3; editorial changes); **19 December 2014** (Corrects mean caloric content value listed in the footnote for Table 5; editorial changes); **16 October 2014** (Certified fatty acid values changed to reference values and moved from Table 1 to Table 4, fatty acid values only include collaborating laboratories data; updated protein value in Table 5; corrected niacinamide value in Table 3; changed footnotes in Table 3; editorial changes); **29 April 2014** (Updated a fatty acid name in Table 4; editorial changes); **17 January 2014** (Certified values added for α-tocopheryl acetate and retinyl palmitate; reference value added for free α-tocopherol; total α-tocopherol value updated using a NIST method; chlorine and myo-inositol values updated using a second method; footnotes added to Table 3 to clarify the forms of thiamine and pyridoxine; editorial changes); **07 August 2012** (Certified value added for iodine; manganese value updated using a third method; information value added for chlorine; collaborating laboratories removed from appendix and listed in the certificate body; footnote added to Table 3 to clarify the form of choline; editorial changes); **05 April 2012** (Correction of the names for Vitamin B_1 and B_6 in Table 3 to indicate the base form used for listed values; editorial changes); **30 January 2012** (Corrected alternate name for eicosanoic acid in Table 1; editorial changes); **01 December 2011** (Original certificate date).

Users of this SRM should ensure that the Certificate of Analysis in their possession is current. This can be accomplished by contacting the SRM Program: telephone (301) 975-2200; fax (301) 948-3730; e-mail srminfo@nist.gov; or via the Internet at http://www.nist.gov/srm.

ANEXO H: MATERIAL DE REFERENCIA CÁRNICOS

tional I nstitute of S tandards & Technology

Certificate of Analysis

Standard Reference Material□ 1546a

Meat Homogenate

This Standard Reference Material (SRM) is intended primarily for validation of methods for determining fatty acids, cholesterol, proximates, calories, elements, vitamins, and amino acids in canned meat products and similar materials. This SRM can also be used for quality assurance when assigning values to in-house reference materials. The meat homogenate is a mixture of pork and chicken products blended together in a commercial process. A unit of SRM 1546a consists of four cans, each containing approximately 85 g of material.

Certified Mass Fraction Values: The certified mass fraction values of selected fatty acids, cholesterol, selected elements, and selected vitamins in SRM 1546a, reported on an as-received basis, are provided in Tables 2 through 4. A NIST certified value is a value for which NIST has the highest confidence in its accuracy in that all known or suspected sources of bias have been investigated or taken into account [1]. Analyses for value assignment were performed by NIST and collaborating laboratories. Certified values were calculated as the mean of the mean values from NIST methods and the median of the mean results provided by collaborating laboratories, where appropriate. The associated uncertainties are expressed at an approximately 95 % level of confidence [2–4].

Reference Mass Fraction Values: Reference mass fraction values, reported on an as-received basis, are provided for additional fatty acids (Table 5), additional elements (Table 6), additional vitamins (Table 7), proximates and calories (Table 8), and amino acids (Table 9). A NIST reference value is a noncertified value that is the best estimate of the true value based on available data; however, the value does not meet the NIST criteria for certification [1] and is provided with associated uncertainties that may reflect only measurement reproducibility, may not include all sources of uncertainty, or may reflect a lack of sufficient statistical agreement among multiple analytical methods. The reference mass fraction values were derived from results reported by NIST or collaborating laboratories.

Information Mass Fraction Values: Information mass fraction values for choline ion and taurine are provided in Table 10. A NIST information value is a value that may be of interest to the SRM user, but insufficient information is available to assess the uncertainty associated with the value, therefore no uncertainty is provided [1]. Information values cannot be used to establish metrological traceability.

Expiration of Certification: The certification of **SRM 1546a** is valid, within the measurement uncertainty specified, until **31 January 2024**, provided the SRM is handled and stored in accordance with the instructions given in this certificate (see "Instructions for Storage and Use"). The certification is nullified if the SRM is damaged, contaminated, or otherwise modified.

Maintenance of SRM Certification: NIST will monitor this SRM over the period of its certification. If substantive technical changes occur that affect the certification before the expiration of this certificate, NIST will notify the purchaser. Registration (see attached sheet or register online) will facilitate notification.

Coordination of the technical measurements leading to the certification of this SRM was performed by M.M. Phillips, K.E. Sharpless, and L.J. Wood of the NIST Chemical Sciences Division and D. Howell and W. Koshute of the Grocery Manufacturers Association (GMA, Washington, DC).

Analytical measurements at NIST were performed by K.D. Chieh, J.L. Molloy, R.L. Paul, B.J. Porter, M.M. Phillips, M.M. Schantz, L.T. Sniegoski, M.J. Welch, and L.J. Wood of the NIST Chemical Sciences Division and B.E. Lang of the NIST Biosystems and Biomaterials Division.

Carlos A. Gonzalez, Chief
Chemical Sciences Division

Gaithersburg, MD 20899
Certificate Issue Date: 02 May 2014

Robert L. Watters, Jr., Director
Office of Reference Materials

SRM 1546a

Page 1 of 11

Analyses for value assignment were also performed by the following laboratories participating in a GMA Food Industry Analytical Chemists Share Group (FIACSG) interlaboratory comparison exercise: Campbell Soup, Camden, NJ; Conagra Foods, Omaha, NE; Covance Laboratories, Inc., Madison, WI; Del Monte Foods, Walnut Creek, CA; Eurofins Central Analytical Laboratories, Metairie, LA; Eurofins Chemical Control, Cuneo, Italy; Eurofins Nutrition Analysis Center, Des Moines, IA; Eurofins Scientific Development Nantes, France; Eurofins Steins Laboratorium, Vejen, Denmark; General Mills, Inc., Golden Valley, MN; Hormel Foods Corporation, Austin, MN; Krueger Food Laboratories, Billerica, MA; Land O'Lakes, Arden Hills, MN; Mars Petcare, Kansas City, MO; Nestle, Dublin, OH; Schwan Food Company, Salina, KS; Silliker Ibérica, Barcelona, Spain; Silliker Beijing, Beijing, China; Silliker Illinois Analytical Laboratory, Crete, IL; Silliker Ontario, Markham, ON Canada; The J.M. Smucker Co., Orville, OH; The National Food Laboratory, Livermore, CA.

Statistical analysis was provided by J.H. Yen of the NIST Statistical Engineering Division.

Support aspects involved in the issuance of this SRM were coordinated through the NIST Office of Reference Materials.

NOTICE TO USERS: SRM 1546a IS INTENDED FOR LABORATORY USE ONLY, NOT FOR HUMAN CONSUMPTION.

INSTRUCTIONS FOR STORAGE AND USE

Storage: The SRM should be stored at room temperature or under refrigeration in the original unopened cans. The certification does not apply to contents of previously opened cans as the stability of all analytes has not been investigated.

Use: Before use, the contents of the can should be mixed thoroughly to ensure homogeneity. One technique recommended is to transfer the entire contents of a can to a plastic bag, then manually squeeze the bag to blend the material. Care should be taken to avoid separating fat from the material. For certified values to be valid, minimum test portions of the following masses should be used: 1.0 g for cholesterol analysis, between 1.5 g and 2.0 g for fatty acid analysis, 3.5 g for elemental analysis, and 2.0 g for vitamin analysis. Results obtained in analyses should include their own estimates of uncertainty and can be compared to the certified values using procedures described in reference 5.

SOURCE, PREPARATION, AND ANALYSIS[1]

Source and Preparation: SRM 1546a is a mixture of pork, mechanically-separated chicken, ham, salt, sucrose, water, and spices and was prepared by the Hormel Foods Corporation, Austin, MN, by a commercial process that included cooking, grinding, blending, and sieving prior to canning under sterile conditions. A small quantity of sodium nitrite was added as a preservative prior to canning.

Analytical Approach for Determination of Fatty Acids and Cholesterol: Value assignment of the mass fractions of fatty acids in SRM 1546a was based on the combination of measurements made using two extraction procedures and two different analytical methods at NIST and by collaborating laboratories, where appropriate. NIST provided results using gas chromatography (GC) with flame ionization detection (FID) and GC with mass spectrometric (MS) detection as described below. Value assignment of the cholesterol mass fraction was based on measurements made by NIST using an isotope dilution (ID) GC/MS method.

NIST Analyses for Fatty Acids by GC-FID: Two 1.5 g to 2.0 g test portions from each of 10 cans of SRM 1546a were added to pressurized fluid extraction cells that were half filled with Hydromatrix (Varian, Palo Alto, CA). The meat homogenate was mixed with the Hydromatrix and additional Hydromatrix was added to fill the cell. The mixtures were spiked with an internal standard solution containing tricosanoic acid, palmitic acid-d_{35}, and myristic acid-d_{27}. The meat homogenate was extracted into hexane:dichloromethane:methanol (70:25:5 volume fraction) containing approximately 1 mg/g butylated hydroxytoluene (BHT). Following extraction, sodium sulfate was added to absorb excess water. Extracts were combined with methanolic (*m*-trifluoromethylphenyl) trimethylammonium hydroxide (1:1 volume fraction), vortexed, and allowed to stand for at least 30 min prior to analysis by GC-FID. GC-FID was performed using a 0.25 mm × 100 m biscyanopropyl polysiloxane fused silica capillary column. Calibrants were prepared gravimetrically, at levels intended to approximate the levels of the fatty

[1] Certain commercial equipment, instruments, or materials are identified in this certificate to adequately specify the experimental procedure. Such identification does not imply recommendation or endorsement by the National Institute of Standards and Technology, nor does it imply that the materials or equipment identified are necessarily the best available for the purpose.

acids in the SRM. A single internal standard solution was used for the calibrants and samples. Calculations are based on average response factors for the calibrants.

NIST Analyses for Fatty Acids by GC/MS: One 1.5 g to 2.0 g test portion from each of six cans of SRM 1546a were added to pressurized fluid extraction cells that were half filled with Hydromatrix (Varian, Palo Alto, CA). The meat homogenate was mixed with the Hydromatrix and additional Hydromatrix was added to fill the cell. The mixtures were spiked with an internal standard solution containing tricosanoic acid, palmitic acid-d_{35}, and myristic acid-d_{27}. The meat homogenate was extracted into hexane:acetone (80:20 volume fraction) containing approximately 1 mg/g BHT. Following extraction, sodium sulfate was added to absorb excess water. Extracts were combined with methanolic sodium hydroxide, blanketed with N_2, capped, mixed, and heated in a dry bath at 100 °C for 30 min with gentle shaking every 10 min. Extracts were cooled to 40 °C and fatty acids were extracted with 40 mg/L BHT in hexane and saturated aqueous sodium chloride solution. The hexane/BHT layer was removed and the hexane/BHT extraction repeated twice and combined with the first extracted portion. A subsample of the combined extracts was analyzed by GC/MS. GC/MS was performed using a 0.25 mm × 60 m fused silica capillary column containing a cyanopropyl:methylpolysiloxane (50 %:50 % mole fraction) phase. Calibrants were prepared gravimetrically, at levels intended to approximate the levels of the fatty acids in the SRM. A single internal standard solution was used for the calibrants and samples. Calculations are based on average response factors for the calibrants.

NIST Analyses for Cholesterol: Cholesterol was measured using the isotope dilution/gas chromatography/mass spectrometry (ID-GC/MS) method developed at NIST for serum cholesterol [6] and modified for the determination of cholesterol in food matrices using AOAC International Official Method 996.06 for hydrolysis [7]. Two sets of samples were prepared. One set consisted of single 2.0 g test portions from each of nine cans of SRM 1546a weighed into screw-capped test tubes. The second set consisted of single 1.0 g test portions from each of ten cans of SRM 1546a weighed into screw-capped test tubes. An aliquot of a solution containing a known mass of the internal standard, cholesterol-$^{13}C_3$, was added to each tube. Hydrolysis of cholesterol esters was accomplished by heating the samples in an alcohol-KOH solution for 1 h at 100 °C. Hexane was then used to extract the cholesterol. A portion of the hexane extract was evaporated to dryness and N,O-bis(trimethylsilyl)acetamide was added to convert cholesterol to its trimethylsilyl (TMS) derivative. Analyses were performed on a GC/MS system operated in the electron impact ionization mode with selected ion monitoring at *m/z* 458 and *m/z* 461 for the unlabeled and labeled cholesterol-TMS, respectively. The GC was equipped with a 30 m (phenyl:methyl polysiloxane 5 %/95 % mole fraction) non-polar fused silica column directly interfaced to the ion source. Standards consisting of mixtures of known quantities of pure unlabeled cholesterol (SRM 911c) and cholesterol-$^{13}C_3$ were run before and after the samples to generate composite linear regressions for calculation of the quantity of cholesterol in the samples.

Analytical Approach for Determination of Elements: Value assignment of the mass fractions of the elements in SRM 1546a was based on the combination of results at NIST and collaborating laboratories, where appropriate. NIST provided measurements by using inductively coupled plasma optical emission spectrometry (ICP-OES), inductively coupled plasma mass spectrometry (ICP-MS), and thermal neutron prompt gamma-ray activation analysis (PGAA).

NIST Analyses for Ba, Ca, Cl, Cu, Fe, K, Mg, Mn, Mo, Na, P, Se, Sr, and Zn Using ICP-OES and/or ICP-MS: Barium, calcium, chlorine, copper, iron, magnesium, manganese, phosphorus, potassium, sodium, strontium, and zinc were measured by ICP-OES. Barium, copper, manganese, molybdenum, selenium, and strontium were measured by ICP-MS. Duplicate 3.5 g to 4.0 g test portions were taken from each of 10 cans of SRM 1546a and were digested in a microwave sample preparation system using nitric acid or a nitric acid/hydrofluoric acid mixture. Quantitation for ICP-OES and ICP-MS was based on the method of standard additions.

NIST Analyses for B Using PGAA: For the determination of boron by PGAA, individual disks were prepared from 1 g test portions taken from each of six packets of SRM 1546a. Samples and controls were packaged individually in clean Teflon bags and irradiated individually for less than 1 h. Gamma-ray spectra up to 11 MeV were collected, and the boron gamma-ray signal at 477 keV was monitored and compared to that of a standard of known purity to determine the mass fraction of boron.

Analytical Approach for Determination of Vitamins: Value assignment of the mass fractions of the vitamins in SRM 1546a was based on the combination of results provided from NIST and collaborating laboratories, where appropriate.

NIST Analyses for Water-Soluble Vitamins: Water-soluble vitamins were measured by using liquid chromatographic (LC) with isotope dilution (ID) tandem mass spectrometry (MS/MS). Calibrants were prepared gravimetrically at levels intended to approximate the levels of the vitamins in the SRM, and a single internal standard solution was used for the calibrants and samples. Thiamine, riboflavin, niacinamide, niacin, pantothenic acid, pyridoxine, and pyridoxamine were measured by LC-MS/MS in duplicate 2 g test portions taken from each of

ten cans. Seven internal standards were added and are listed in Table 1. The analytes and internal standards were extracted into dilute acetic acid for analysis by positive-ion mode LC-MS/MS. A gradient method with an ammonium formate buffer/methanol mobile phase and a C_{18} column were used for LC-MS/MS determination of the vitamins. Multiple transitions were monitored for each vitamin and internal standard, as listed in Table 1.

Table 1. LC-MS/MS Transitions Monitored for Vitamins

Compound	Precursor Ion (*m/z*)	→ Product Ion (*m/z*)	Internal Standard (IS)	IS Precursor Ion (*m/z*)	→ IS Product Ion (*m/z*)
Thiamine	266	42	$^{13}C_3$-Thiamine	269	42
		123			123
Riboflavin	377	43	$^{13}C_4$,$^{15}N_2$-Riboflavin	383	43
		172			175
		198			202
		243			249
Niacinamide	123	53	$^{2}H_4$-Niacinamide	127	56
		78			81
		80			84
Pantothenic Acid	220	41	$^{13}C_3$,^{15}N-Pantothenic Acid	224	41
		43			43
		72			76
		90			94
Pyridoxine	170	77	$^{13}C_4$-Pyridoxine	174	81
		80			83
		134			138
		152			156
Pyridoxamine	169	77	$^{2}H_3$-Pyridoxamine	172	79
		134			136
		152			155

Collaborating Laboratories' Analyses: The GMA FIACSG laboratories were asked to use their usual methods to make single measurements of fatty acids, cholesterol, proximates, calories, elements, vitamins, and amino acids on test portions taken from each of two cans of SRM 1546a. Because of variability among data provided by laboratories participating in an interlaboratory comparison exercise, the median of laboratory means is used, with the uncertainty estimated using the median absolute deviation (MADe) [8].

Homogeneity Assessment: The homogeneity of fatty acids, cholesterol, elements, and vitamins was assessed at NIST using the methods and test portion sizes described above. Analysis of the variance showed statistically significant heterogeneity in some cases, and the uncertainties for barium, calcium, pantothenic acid, pyridoxamine dihydrochloride, pyridoxine hydrochloride, riboflavin, sodium, strontium, thiamine, and total vitamin B_6 as pyridoxine hydrochloride all incorporate an uncertainty component for possible heterogeneity. Homogeneity of constituents measured solely by collaborating laboratories (e.g., proximates, amino acids) was not assessed, although the data were treated as through these analytes were homogeneously distributed.

Value Assignment: The collaborating laboratories reported the individual results for each of their analyses for a given analyte. The mean of each laboratory's results was then determined. For calculation of assigned values for analytes that were measured only by the collaborating laboratories, the median of the laboratory means was used. For analytes that were also measured by NIST, the mean of the individual sets of NIST data were averaged with the median of the individual collaborating laboratory means, as appropriate.

Certified Mass Fraction Values for Fatty Acids as Free Fatty Acids: Each certified mass fraction value is the combined mean from the mean of NIST GC/MS data, the mean of NIST GC-FID data, and the median of the mean results provided by collaborating laboratories, where appropriate. The uncertainty provided with each value is an expanded uncertainty about the mean to cover the measurand with approximately 95 % confidence. The expanded uncertainty is calculated as $U = ku_c$, where u_c incorporates the observed difference between the results from the methods and their respective uncertainties consistent with the ISO/JCGM Guide and with its Supplement 1, and k is a coverage factor corresponding to approximately 95 % confidence [2–4]. The measurands are the mass fractions of selected free fatty acids in meat homogenate. The certified values are metrologically traceable to the SI unit of grams per 100 grams.

Certified Mass Fraction Value for Cholesterol: The certified mass fraction for cholesterol is the mean of results obtained by NIST using ID-GC/MS. The uncertainty provided with the value is an expanded uncertainty about the mean to cover the measurand with approximately 95 % confidence. The expanded uncertainty is calculated as $U = ku_c$, where u_c represents the combined uncertainty consistent with the ISO/JCGM Guide and with its Supplement 1, and k is a coverage factor corresponding to approximately 95 % confidence [2,3]. The uncertainty for cholesterol incorporates Type B uncertainties for purity of the reference compound, completeness of hydrolysis, stability of cholesterol in base, and the difference between the certification set of data and a confirming set of data using a different GC column and different ions. The measurand is the mass fraction of cholesterol in meat homogenate. The certified values are metrologically traceable to the SI unit of milligrams per gram.

Table 2. Certified Mass Fraction Values for Fatty Acids (as Free Fatty Acids) and Cholesterol in SRM 1546a

	Common Name	Mass Fraction (g/100 g)	Coverage Factor, k
Dodecanoic Acid (C12:0)[a,b,c]	Lauric Acid	0.0153 ± 0.0011	2.00
Tetradecanoic Acid (C14:0)[a,b,c]	Myristic Acid	0.245 ± 0.023	2.00
(Z)-9-Tetradecenoic Acid (C14:1 n-5)[a,b,c]	Myristoleic Acid	0.0118 ± 0.0028	2.00
Hexadecanoic Acid (C16:0)[a,b,c]	Palmitic Acid	4.63 ± 0.53	2.00
(Z)-9-Hexadecenoic Acid (C16:1 n-7)[a,b,c]	Palmitoleic Acid	0.618 ± 0.078	2.00
Octadecanoic Acid (C18:0)[a,b,c]	Stearic Acid	2.18 ± 0.32	2.00
(Z)-9-Octadecenoic Acid (C18:1 n-9)[a,b,c]	Oleic Acid	8.09 ± 0.40	2.00
(Z)-11-Octadecenoic Acid (C18:1 n-7)[a,b]	Vaccenic Acid	0.324 ± 0.017	2.00
(Z,Z)-9,12-Octadecadienoic Acid (C18:2 n-6)[a,b,c]	Linoleic Acid	3.32 ± 0.42	2.00
(Z,Z,Z)-9,12,15-Octadecatrienoic Acid (C18:3 n-3)[a,b,c]	α-Linolenic Acid	0.133 ± 0.020	2.00
Eicosanoic Acid (C20:0)[a,b,c]	Arachidic Acid	0.0329 ± 0.0009	2.00
(Z)-11-Eicosenoic Acid (C20:1 n-9)[a,b,c]	Gondoic Acid	0.1322 ± 0.0044	2.00
(Z,Z,Z,Z)-5,8,11,14-Eicosatetraenoic Acid (C20:4 n-6)[a,b]	Arachidonic Acid	0.0201 ± 0.0011	2.00
Docosanoic Acid (C22:0)[a,b]	Behenic Acid	0.0442 ± 0.0010	2.00
Tetracosanoic Acid (C24:0)[a,b,c]	Lignoceric Acid	0.0068 ± 0.0003	2.00
(Z)-15-Tetracosenoic Acid (C24:1 n-9)[a,b,c]	Nervonic Acid	0.0228 ± 0.0009	2.00

	Mass Fraction (mg/g)	Coverage Factor, k
Cholesterol[d]	0.717 ± 0.022	2.00

[a] NIST GC-FID
[b] NIST GC/MS
[c] Collaborating laboratories
[d] NIST ID-GC/MS

Certified Mass Fraction Values for Elements: Each certified mass fraction value is the combined mean from the mean of results from analyses by NIST and the median of the mean of results provided by collaborating laboratories, where appropriate. The uncertainty provided with each value is an expanded uncertainty about the mean to cover the measurand with approximately 95 % confidence. The expanded uncertainty is calculated as $U = ku_c$, where u_c incorporates the observed difference between the results from the methods and their respective uncertainties consistent with the ISO/JCGM Guide and with its Supplement 1, and k is a coverage factor corresponding to approximately 95 % confidence [2–4]. The uncertainty for sodium also incorporates an additional uncertainty component for possible inhomogeneity. The measurands are the mass fractions of selected elements in meat homogenate. The certified values are metrologically traceable to the SI unit of milligram per kilogram.

Table 3. Certified Mass Fraction Values for Elements in SRM 1546a

	Mass Fraction (mg/kg)			Coverage Factor, k
Copper (Cu)[a,b,c]	0.605	±	0.051	2.00
Iron (Fe)[a,c]	10.17	±	0.35	2.00
Magnesium (Mg)[a,c]	178.1	±	4.8	2.00
Manganese (Mn)[a,b,c]	0.286	±	0.024	2.00
Phosphorus (P)[a,c]	1651	±	32	2.00
Potassium (K)[a,c]	2490	±	210	2.00
Selenium (Se)[b,c]	0.288	±	0.009	2.00
Sodium (Na)[a,c]	9600	±	1100	2.00
Zinc (Zn)[a,c]	17.88	±	0.35	2.00

[a] NIST ICP-OES
[b] NIST ICP-MS
[c] Collaborating laboratories

Certified Mass Fraction Values for Vitamins: Each certified mass fraction value is the combined mean from the mean of results from analyses by NIST and the median of the mean of results provided by collaborating laboratories, where appropriate. The uncertainty provided with each value is an expanded uncertainty about the mean to cover the measurand with approximately 95 % confidence. The expanded uncertainty is calculated as $U = ku_c$, where u_c incorporates the observed difference between the results from the methods and their respective uncertainties consistent with the ISO/JCGM Guide and with its Supplement 1, and k is a coverage factor corresponding to approximately 95 % confidence [2–4]. The uncertainties for pantothenic acid and pyridoxamine dihydrochloride also incorporate an additional uncertainty component for possible inhomogeneity. The values for the vitamins represent the free (unbound) forms. The measurands are the mass fractions of selected vitamins in meat homogenate. The certified values are metrologically traceable to the SI unit of milligram per kilogram.

Table 4. Certified Mass Fraction Values for Vitamins in SRM 1546a

	Mass Fraction (mg/kg)			Coverage Factor, k
Niacin (Vitamin B_3)[a]	0.401	±	0.022	2.09
Niacinamide (Vitamin B_3)[a]	38.18	±	0.74	2.09
Total Vitamin B_3 as Niacinamide[a,b,c]	41.0	±	4.8	2.00
Pantothenic Acid (Vitamin B_5)[a,b]	4.58	±	0.59	2.00
Pyridoxamine Dihydrochloride (Vitamin B_6)[a]	0.390	±	0.078	2.00

[a] NIST ID-LC/MS/MS
[b] Collaborating laboratories
[c] NIST measured niacinamide and niacin individually, and niacin was mathematically converted to niacinamide by multiplication by the ratio of the relative molecular masses.

Reference Mass Fraction Values for Fatty Acids as Free Fatty Acids: Each reference mass fraction value is the mean from the mean of analyses by NIST using GC/MS or the median of the mean results provided by collaborating laboratories. The uncertainty provided with each value is an expanded uncertainty about the mean to cover the measurand with approximately 95 % confidence. The expanded uncertainty is calculated as $U = ku_c$, where u_c is the combined uncertainty, consistent with the ISO/JCGM Guide and with its Supplement 1, and k is a coverage factor corresponding to approximately 95 % confidence [2,3]. The measurands are the mass fractions of selected free fatty acids in meat homogenate as determined by the method indicated and by the collaborating laboratories. The reference values are metrologically traceable to the SI unit of grams per 100 grams.

Table 5. Reference Mass Fraction Values for Fatty Acids (as Free Fatty Acids) in SRM 1546a

	Common Name	Mass Fraction (g/100 g)	Coverage Factor, k
Decanoic Acid (C10:0)[a]	Capric Acid	0.1645 ± 0.0094	2.57
Pentadecanoic Acid (C15:0)[b]		0.010 ± 0.002	2.00
Heptadecanoic Acid (C17:0)[b]	Margaric Acid	0.0575 ± 0.0028	2.18
(Z)-10-Heptadecenoic Acid (C17:1 n-6)[b]	Margaroleic Acid	0.0480 ± 0.0050	2.31
(E)-9-Octadecenoic Acid (C18:1-9t)[b]	Elaidic Acid	0.053 ± 0.011	2.36
(E)-11-Octadecenoic Acid (C18:1-11t)[b]	*trans*-Vaccenic Acid	0.019 ± 0.010	2.57
Total *trans*-C18:1[b]		0.062 ± 0.010	2.20
Total *cis*-C18:1[b]		7.68 ± 0.15	2.16
Total *trans*-C18:2[b]		0.0200 ± 0.0069	2.45
Total *cis*-C18:2[b]		2.96 ± 0.12	2.20
Total *trans*-C18:2 conjugated[b]		0.015 ± 0.012	2.78
(Z,Z,Z)-6,9,12-Octadecatrienoic Acid (C18:3 n-6)[b]	γ-Linolenic Acid	0.0107 ± 0.0022	3.18
Total *cis*-C20:1[b]		0.142 ± 0.014	2.18
(Z,Z)-11,14-Eicosadienoic Acid (C20:2 n-6)[b]		0.1250 ± 0.0095	2.18
(Z,Z,Z)-8,11,14-Eicosatrienoic Acid (C20:3 n-3)[b]	Dihomo-γ-linolenic Acid, DGLA	0.0266 ± 0.0023	2.26
(Z,Z,Z)-11,14,17-Eicosatrienoic Acid (C20:3 n-3)[b]		0.0140 ± 0.0034	2.45
(Z)-13-Docosenoic Acid (C22:1 n-9)[b]	Erucic Acid	0.0230 ± 0.0025	2.23
Total *cis*-C22:4[b]		0.0325 ± 0.0035	2.78
Total *cis*-C22:5[b]		0.0140 ± 0.0012	2.78
Saturated Fat[b]		6.40 ± 0.15	2.16
cis-Monounsaturated Fat[b]		8.49 ± 0.24	2.16
cis-Polyunsaturated Fat[b]		3.293 ± 0.092	2.16
Total *trans* Fat[b]		0.089 ± 0.023	2.16
Total ω-3 Fatty Acids[b]		0.135 ± 0.015	2.16
Total ω-6 Fatty Acids[b]		3.127 ± 0.093	2.18

[a] NIST GC/MS
[b] Collaborating laboratories

Reference Mass Fraction Values for Elements: Each reference mass fraction value is the combined mean from the mean of results from analyses by NIST and the median of the mean of results provided by collaborating laboratories, where appropriate. The uncertainty provided is an expanded uncertainty about the mean to cover the measurand with approximately 95 % confidence. The expanded uncertainty is calculated as $U = ku_c$, where u_c represents the combined uncertainty consistent with the ISO/JCGM Guide and with its Supplement 1, and k is a coverage factor corresponding to approximately 95 % confidence [2–4]. The uncertainties for barium, calcium, and strontium also incorporate an additional uncertainty component for possible inhomogeneity. The measurands are the mass fractions of selected elements in meat homogenate as determined by the methods indicated and by the collaborating laboratories. The reference values are metrologically traceable to the SI unit of milligram per kilogram.

Table 6. Reference Mass Fraction Values for Elements in SRM 1546a

	Mass Fraction (mg/kg)			Coverage Factor, k
Barium (Ba)[a,b]	0.077	±	0.019	2.00
Boron (B)[c]	0.306	±	0.039	2.57
Calcium (Ca)[a,d]	360	±	130	2.00
Chlorine (Cl)[a]	16 390	±	520	2.09
Molybdenum (Mo)[b]	0.016	±	0.002	2.07
Strontium (Sr)[a,b]	0.305	±	0.070	2.00

[a] NIST ICP-OES
[b] NIST ICP-MS
[c] NIST PGAA
[d] Collaborating laboratories

Reference Mass Fraction Values for Vitamins: Each reference mass fraction value is the mean from the combination of the mean results from NIST and the median of the mean of results provided by collaborating laboratories, where appropriate. The uncertainty provided is an expanded uncertainty about the mean to cover the measurand with approximately 95 % confidence. The expanded uncertainty is calculated as $U = ku_c$, where u_c represents the combined uncertainty consistent with the ISO/JCGM Guide and with its Supplement 1, and k is a coverage factor corresponding to approximately 95 % confidence [2–4]. The uncertainties for thiamine, riboflavin, pyridoxine hydrochloride, and total vitamin B_6 as pyridoxine hydrochloride also incorporate an additional uncertainty component for possible inhomogeneity. The measurands are the mass fractions of selected vitamins in meat homogenate as determined by the methods indicated and by the collaborating laboratories. The reference values are metrologically traceable to the SI unit of milligram per kilogram.

Table 7. Reference Mass Fraction Values for Vitamins in SRM 1546a

	Mass Fraction (mg/kg)			Coverage Factor, k
Thiamine (Vitamin B_1)[a,b,c,d]	0.90	±	0.48	2.00
Riboflavin (Vitamin B_2)[a,d]	0.35	±	0.10	2.00
Total Vitamin B_5 by Microbiological Assay[b]	6.4	±	2.4	2.45
Pyridoxine Hydrochloride (Vitamin B_6)[a,d]	0.054	±	0.014	2.00
Total Vitamin B_6 as Pyridoxine Hydrochloride[a,d,e]	0.387	±	0.076	2.00
Total Vitamin B_6 by Microbiological Assay[b]	1.83	±	0.69	3.18
Total Vitamin B_{12} by Microbiological Assay[b]	0.0055	±	0.0016	2.78

[a] NIST ID-LC/MS/MS
[b] Collaborating laboratories
[c] Reported as thiamine ion (relative molecular mass of 265.36 g/mol), not chloride or chloride hydrochloride.
[d] This value represents the free (unbound) form of the vitamin.
[e] NIST measured pyridoxamine dihydrochloride and pyridoxine hydrochloride individually, and pyridoxamine dihydrochloride was mathematically converted to pyridoxine hydrochloride by multiplication by the ratio of the relative molecular masses.

Reference Values for Proximates and Calories: Each reference value is the median of the mean results provided by collaborating laboratories. The uncertainty provided is an expanded uncertainty about the mean to cover the measurand with approximately 95 % confidence. The expanded uncertainty is calculated as $U = ku_c$, where u_c represents the combined uncertainty consistent with the ISO/JCGM Guide and with its Supplement 1, and k is a coverage factor corresponding to approximately 95 % confidence [2,3]. The measurands are the mass fractions of selected proximates and caloric content in meat homogenate as determined by the collaborating laboratories and the methods they used. The reference values for selected proximates are metrologically traceable to the SI unit of grams per 100 grams. The reference value for caloric content is metrologically traceable to the SI unit of kilocalorie per 100 grams.

Table 8. Reference Values for Proximates and Calories in SRM 1546a

	Mass Fraction (g/100 g)	Coverage Factor, k
Solids	39.73 ± 0.22	2.10
Ash	3.09 ± 0.05	2.10
Protein[a]	15.68 ± 0.18	2.09
Carbohydrates	1.65 ± 0.47	2.10
Fat (as the sum of fatty acids as triglycerides)	18.96 ± 0.40	2.10
	Energy (kcal per 100 g)	**Coverage Factor, k**
Calories[b]	242 ± 4	2.11

[a] A factor of 6.25 was used to convert nitrogen results to protein.

[b] The reference value for calories is the median of lab mean caloric calculations from the interlaboratory comparison exercise. If the mean proximate values above are used for calculation, with caloric equivalents of 9, 4, and 4 for fat (as the sum of fatty acids as triglycerides), protein, and carbohydrate, respectively, the mean caloric content is 240 kcal per 100 grams.

Reference Mass Fraction Values for Amino Acids: Each reference mass fraction value is the median of the mean results provided by collaborating laboratories. The uncertainty provided is an expanded uncertainty about the mean to cover the measurand with approximately 95 % confidence. The expanded uncertainty is calculated as $U = ku_c$, where u_c represents the combined uncertainty consistent with the ISO/JCGM Guide and with its Supplement 1, and k is a coverage factor corresponding to approximately 95 % confidence [2,3]. The measurands are the mass fractions of selected amino acids in meat homogenate as determined by the methods indicated. The reference values are metrologically traceable to the SI unit of grams per 100 grams.

Table 9. Reference Mass Fraction Values for Amino Acids in SRM 1546a

	Mass Fraction (g/100 g)			Coverage Factor, k
Alanine	0.95	±	0.06	2.57
Arginine	0.99	±	0.06	2.57
Aspartic Acid	1.4	±	0.2	2.45
Cystine	0.148	±	0.007	3.18
Glutamic Acid	2.2	±	0.3	2.57
Glycine	0.92	±	0.03	2.45
Histidine	0.53	±	0.03	2.45
Hydroxyproline	0.23	±	0.02	4.30
Isoleucine	0.6	±	0.1	2.45
Leucine	1.17	±	0.06	2.45
Lysine	1.23	±	0.04	2.45
Methionine	0.39	±	0.04	2.57
Phenylalanine	0.62	±	0.03	2.45
Proline	0.7	±	0.1	2.57
Serine	0.64	±	0.04	2.45
Threonine	0.68	±	0.07	2.45
Tryptophan	0.15	±	0.03	3.18
Tyrosine	0.49	±	0.04	2.45
Valine	0.69	±	0.05	2.45

Information Mass Fraction Values for Other Selected Measurands: Each information mass fraction value is the average of the means of duplicate results provided by two collaborating laboratories.

Table 10. Information Mass Fraction Values for Additional Constituents in SRM 1546a

	Mass Fraction (mg/kg)
Choline Ion	470
Taurine	700

REFERENCES

[1] May, W.; Parris, R.; Beck II, C.; Fassett, J.; Greenberg, R.; Guenther, F.; Kramer, G.; Wise, S.; Gills, T.; Colbert, J.; Gettings, R.; MacDonald, B.; *Definition of Terms and Modes Used at NIST for Value-Assignment of Reference Materials for Chemical Measurements*; NIST Special Publication 260-136; U.S. Government Printing Office: Washington, DC (20); available at http://www.nist.gov/srm/upload/SP260-136.PDF (accessed May 2014).

[2] JCGM 100:2008; *Evaluation of Measurement Data — Guide to the Expression of Uncertainty in Measurement* (GUM 1995 with Minor Corrections); Joint Committee for Guides in Metrology (JCGM) (2008); available at http://www.bipm.org/utils/common/documents/jcgm/JCGM_1_28_E.pdf (accessed May 2014); see also Taylor, B.N.; Kuyatt, C.E.; *Guidelines for Evaluating and Expressing the Uncertainty of NIST Measurement Results*; NIST Technical Note 1297; U.S. Government Printing Office: Washington, DC (1994); available at http://www.nist.gov/pml/pubs/tn1297/index.cfm (accessed May 2014).

[3] JCGM 101:2008; *Evaluation of Measurement Data – Supplement 1 to the Guide to Expression of Uncertainty in Measurement, Propagation of Distributions Using a Monte Carlo Method*; JCGM (2008); available at http://www.bipm.org/utils/common/documents/jcgm/JCGM_101_28_E.pdf (accessed May 2014).

[4] Efron, B.; Tibshirani, R.J.; *An Introduction to the Bootstrap*; Chapman & Hall, London, UK (1993).

[5] Sharpless, K.E.; Duewer, D.L.; *Standard Reference Materials for Analysis of Dietary Supplements*; J. AOAC Int., Vol. 91, pp. 1298–1302 (28).

[6] Ellerbe, P.; Meiselman, S.; Sniegoski, L.T.; Welch, M.J.; White V, E., *Determination of Serum Cholesterol by a Modification of the Isotope Dilution Mass Spectrometric Definitive Method*, Anal. Chem., Vol. 614, pp. 1718–1723 (1989).

[7] AOAC Official Method 996.06; *Official Methods of Analysis*; 18th edition, AOAC International, Gaithersburg, MD (2000).

[8] Huber, P.J; *Robust Statistics*; John Wiley: New York (1981).

Users of this SRM should ensure that the Certificate of Analysis in their possession is current. This can be accomplished by contacting the SRM Program: telephone (301) 975-2200; fax (301) 948-3730; e-mail srminfo@nist.gov; or via the Internet at http://www.nist.gov/srm.